KSMPNL22CCT27 LED Temperature Color Changing Panel

Project:	
Type:	
Catalog #:	

STANDARD

The Color Changing Panel is typically used to replace 2'x2' fluorescent fixtures or new construction. It is designed to lay in drop ceilings in offices, schools, and healthcare applications. The Color Changing Panel offers 0-10VDC Control dimming standard and CCT adjustable. The LEDs enable long life, high lumen maintenance, and high CRI, and are low maintenance and constructed without hazardous materials.

FEATURES

- *Face frame is extruded aluminum painted white*
- *Ultra thin for narrow plenums*
- *Delivered Light Output: 4000 lumens (at 3000K)*
- *Input Power: 40 watts (at 2700K)*
- *CRI: 80*
- *CCT: 2700K, 4000K, 5000K, 6500K adjustable*
- *Input Voltage: 100-277 VAC*
- *Warranty: 5 years*
- *Lifetime: Designed to last 50,000 hours*
- *Dimming: CCT adjustable and 10%-100% with 0-10V dimming controls*
- *Mounting: Recessed, Suspension*
- *Dimensions: L 23.7" x W 23.7" x H 1.8"*
- *Weight: max 8 lbs.*
- *Certification: Comply with cETLus, CEC Title 24, FCC*
- *Environment: Damp Location*
- *Also Available in 2' x 4'*
- *Fits standard T-bar and narrow grid drop ceilings*
- *7/8" conduit knockout provided*

** Contact factory for other color temperatures and lumen packages.*
*** L_{70} hours are IES TM-21-11 calculated hours.*

DIMENSIONS

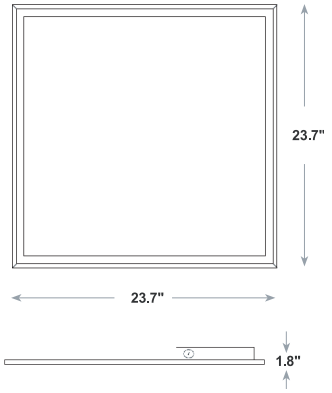

ORDERING INFORMATION

ORDER NUMBER	WATTS	NOMINAL LUMENS	LAMP LIFE (HRS.)	DIMENSIONS (L"xW"xH")	CCT
KSMPNL22CCT27K-65K-DIM	50*	5000*	50,000	23.7" x 23.7" x 1.8"	2700/4000/5000/6500

**measured at 3000K CCT*

KSMPNL22CCT27 LED Temperature Color Changing Panel

Product Specifications

ITEM	SPECIFICATION	DETAILS
General Performance	Spacing Criteria	Available upon request
	Color Temperature (CCT)	2700K 4000K 5000K 6500K
	Wattage	40W 38W 40W
	Nominal Lumens Delivered	4000lm 4180lm 4200lm
	Efficacy (LM/W)	100lm/w 110lm/w 105lm/w
	CRI	>80
	Color Consistency	Proprietary binning for uniform color
	Lumen Maint. (L70)	50,000 hours
Electrical	Power Factor	Over 90%
	Input Voltage	100V-277V 50/60 Hz
	Power Consumption	40 watt nominal (2700K)
Control	Dimming Switch	Standard 0-10V dimming 10%-100% 4 CCT adjustable
Physical	Dimensions	23.7" x 23.7" x 1.8"
	Weight	8.25 lbs.
	Housing	Aluminum
	Lens	Translucent white PS
	Mounting	Fits standard grid for drop ceilings
	Operating Temperature	-5°F to 104°F
	Humidity	20% - 75% RH, non condensing
Certification	Certification	Comply with cETLus, CEC Title 24, FCC
	Material Usage	RoHS compliant; no mercury
	Environment	Damp location
	Warranty	Five year

Application Reference tested at 3000K

Open Space					
Spacing	Lumens	Wattage	LPW	w/ft ²	Average fc
8 x 8	4000 Lm	40	100	0.62	56
8 x 10	4000 Lm	40	100	0.49	44
10 x 10	4000 Lm	40	100	0.40	37
10 x 12	4000 Lm	40	100	0.32	28

9' ceiling: 80/50/20 reflectances, 2.5' workplane, open room LLF: 1.0 Initial. Open Space: 50' x 40' x 10'

Photometry

MYP22-CCT-W40

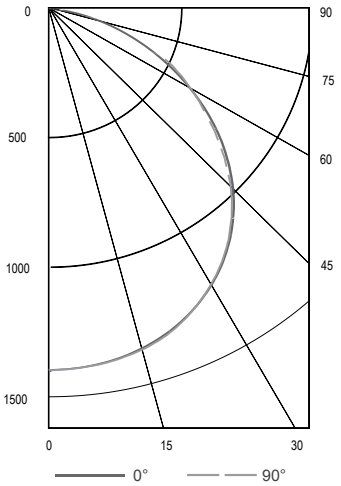

Intensity (Candlepower) Summary

Angle	0°	90°
0°	1408	1408
5°	1403	1402
15°	1345	1342
25°	1245	1240
35°	1118	1111
45°	925	917
55°	737	727
65°	505	495
75°	260	254
85°	55	57
90°	1	2

Zonal Lumen Summary

Zone	Lumens	% Lamp	% Fix
0-30	1097	27.0%	27.0%
0-40	1800	44.3%	44.3%
0-60	3196	78.7%	78.7%
0-90	4062	100%	100%