HOT100 SERIES

90°C LED High Temperature Lights

Project:	
Type:	
Catalog #:	

CE RoHS

Features:

- Designed with the most advanced technology it can resist high heat up to 90℃/190 °F.
- It's produced with super high efficiency 150Lm/W with high brightness.
- It can be installed on high ceiling up to 50 meters
- With anti glare design, it provides comfortable lighting.
- Anti vibration tested, it's good to resist mechanical shock
- IP66 waterproof for 100% humidity environment applications.

HOT100 SERIES

90°C LED High Temperature Lights

Part NO	HOT-FLN-75	HOT-FLN-100	HOT-FLN-150	HOT-FLN-200	HOT-FLN-300	HOT-FLN-400
Power	75W	100W	150W	200W	300W	400W
Luminous Flux	11250Lm	15000Lm	22500Lm	30000Lm	45000Lm	60000Lm
Equal MH Lamp	400W	400W	750W	750W	1000W	1500W
Light Dimension (mm)	300*250*220	300*300*220	360*350*220	460*360*220	500*420*220	560*530*220
Light Weight	5KG	6KG	9KG	11.5KG	17.7KG	21KG
Power Factor (PF)	⩾0.95					
Light Source	Bridgelux					
Power Supply	Meanwell driver					
Light Angle	25°, 40°, 60° 90°,120°					
Color Index(CRI)	80					
Luminous Efficacy	150Lm/W					
IP Rating	IP66					
Work Temperature:	- 40 ° C ~90 ° C					
Working Humidity	10 % ~ 90 % RH					
Storage Temperature	- 40 ° C ~ 80 ° C					
Life Span	⩾80000 hours					
Input Voltage	90-295VAC 50-60HZ/ 347-480VAC optional					
Power Efficiency	⩾90%					
Color Temp	2700-3500K /5000-6500K/ 6500-7500K					
Mounting	Hook mount					
Surge Protection	10KV/20KV optional					
Warranty	5 Years					
Certificate	CE, ROHS, TUV, ETL, DLC					

Installation procedure:

1. Install the hook in the right place where led high bay light will be installed（the hook should match with M8 rings on top of high bay light,at the same time,load capacity of the hook should be more than 60kg）

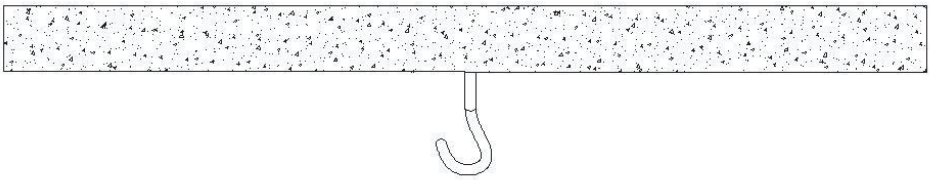

2.Make the hook hold well the rings.

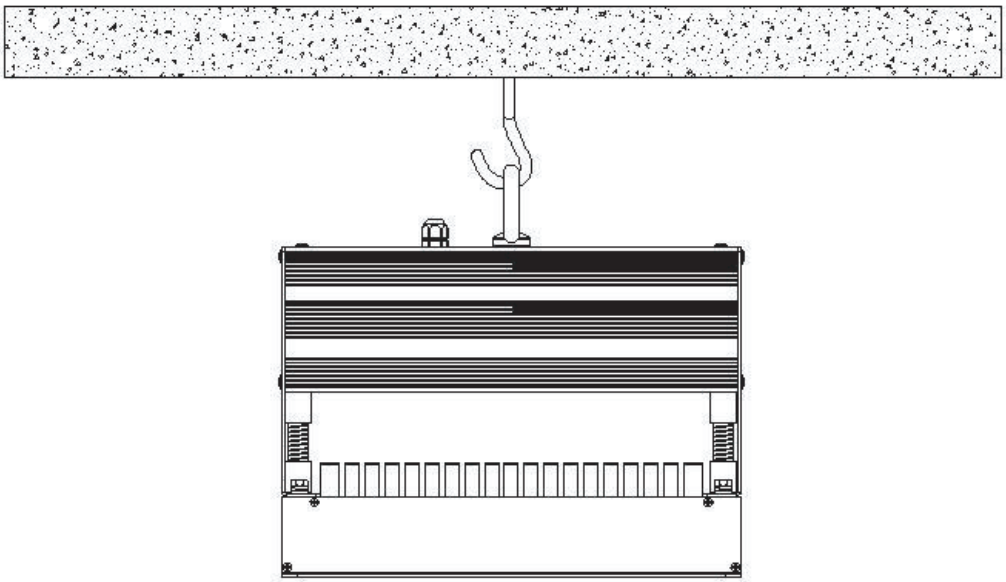

3. Connect the power cables as below

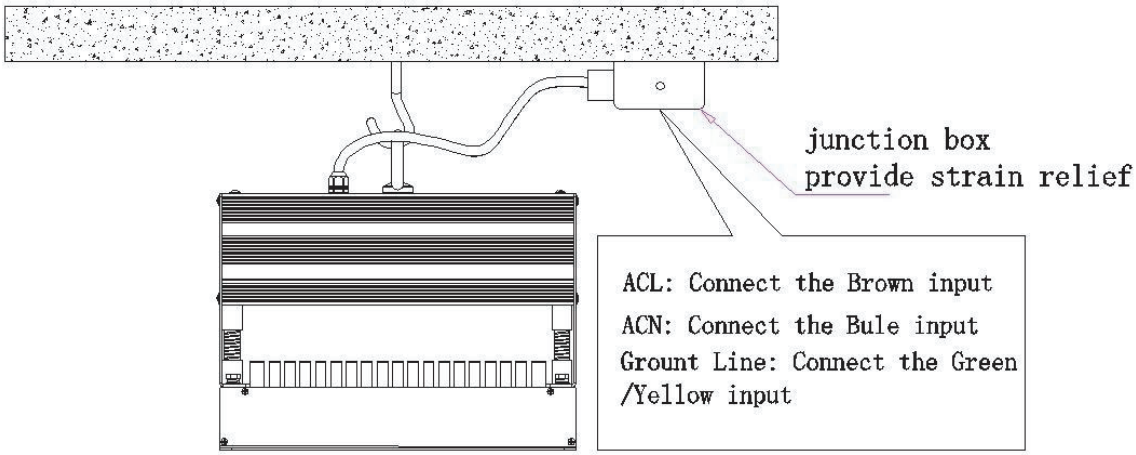

ACL: Connect the Brown input ACN: Connect the Blue input
Grount Line: Connect the Green/Yellow input

4. Power Switch on,make sure light on.
5. All done.

Remark：
1. Make sure power off when installing or changing spare parts;
2. Make sure local working voltage could match the lamp.