# FLEDR-1 LED Emergency Unit

| | |
|---|---|
| **Project:** | |
| **Type:** | |
| **Catalog #:** | |

*STANDARD* | *OPTIONAL*

UL LISTED · ALL LED · DAMP LOCATION · SDT · HIGH LUMEN

## ILLUMINATION

- *Long lasting, efficient ultra-bright white LED lamp heads.*
- *1 watt (8 LEDs x 0.125 watt) per head.*
- *High-performance chrome-plated metalized reflector and plastic lens for optimal light distribution.*
- *Adjustable LED lamp heads provide optimal center-to-center spacing. High-lumen option available for increased center-to-center spacing.*

## ELECTRICAL

- *Dual 120/277 voltage.*
- *Charge rate/power "ON" LED indicator light and push to test switch for mandated code compliance testing.*
- *3.6V long-life, maintenance-free, rechargeable NiCd battery.*
- *Internal solid-state transfer switch automatically connects the internal battery to LED lamp heads for minimum 90-minute emergency illumination.*
- *Fully automatic solid-state, two-rate charger initiates battery charging to recharge a discharged battery in 24 hours.*

## MOUNTING

- *Surface mount via quick-connect back plate; fits most standard size junction boxes and snaps into place to make internal electrical connections.*
- *Top and side knockout for conduit applications.*
- *Suitable for wall or ceiling mount.*

## HOUSING

- *Injection-molded, engineering-grade, 5VA flame retardant, high-impact resistant, thermoplastic in white or black finish.*

## OPTIONS

- *SDT: Self-diagnostic test feature performs monthly, biannually, and annually tests to ensure reliable operation and to meet electrical and life safety codes.*
- *HL: 12-LED heads (12 LEDs x 0.125 watt) per head provide increased center-to-center spacing.*
- *SPV: 208/220/240 multi-tap voltage in 50/60Hz.*

## WARRANTY/LISTING

- *Five year warranty on all electronics and housing. Batteries pro-rated for five years.*
- *UL listed for damp locations. (0°C – 50°C)*
- *Meets UL924, NFPA101 Life Safety Code, NEC, OSHA, Local and State Codes.*

## DIMENSIONS

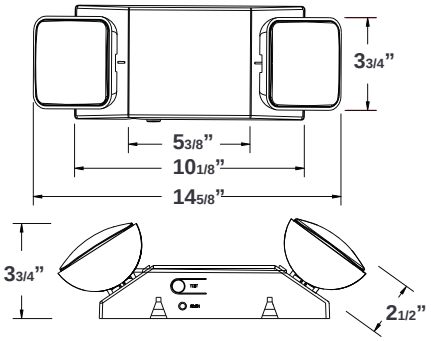


## ORDERING INFORMATION

*Sample Part Number: FLEDR-1*

*Notes:*

*1. Not available with SDT options.*

| Model | Housing Color | | Options | |
|---|---|---|---|---|
| FLEDR-1 | Blank | White | SDT | Self-Diagnostics |
| | B | Black | SPV | 208/220/240 Volt, 50/60Hz (1) |
| | | | HL | High-Lumen |

FME Lighting | 877-234-8460 | info@fmelighting.com

*Specifications and dimensions subject to change without notice.*

# FLEDR-1 LED Emergency Unit

| | |
|---|---|
| **Project:** | |
| **Type:** | |
| **Catalog #:** | |

## ELECTRICAL INFORMATION

| CATALOG NUMBER | INPUT WATTS (W) | | | | | INPUT AMPS (A) | | | | |
|---|---|---|---|---|---|---|---|---|---|---|
| | 120V | 277V | 208V | 220V | 240V | 120V | 277V | 208V | 220V | 240V |
| FLEDR-1 | 1.8 | 1.8 | 2.6 | 3.5 | 3.1 | 0.022 | 0.010 | 0.024 | 0.029 | 0.025 |
| FLEDR-1 SDT | 1.6 | 1.6 | - | - | - | 0.020 | 0.010 | - | - | - |

## CENTER-TO-CENTER SPACING GUIDELINES

*For reference only.*

UNIT LOCATION
LIGHT SOURCE

| | | | | | | | | | | | | | | | |
|---|---|---|---|---|---|---|---|---|---|---|---|---|---|---|---|
| 1' | 0.2 | 0.3 | 0.5 | 0.4 | 0.4 | 0.5 | 0.6 | 0.8 | 1 | 0.8 | 0.9 | 0.8 | 0.4 | 0.2 | 0.2 |
| 2' | 0.3 | 0.5 | 0.7 | 0.8 | 0.9 | 0.8 | 0.9 | 1 | 1.1 | 1.4 | 1.1 | 0.8 | 0.5 | 0.3 | 0.2 |
| 3' | 0.4 | 0.7 | 1 | 1 | 1.1 | 1.1 | 1.1 | 1.3 | 1.4 | 1.1 | 0.9 | 0.9 | 0.7 | 0.5 | 0.2 |
| 4' | 0.5 | 0.7 | 0.9 | 1.1 | 1.2 | 1.2 | 1 | 1.1 | 1.1 | 1 | 1.1 | 0.8 | 0.6 | 0.3 | 0.2 |
| 5' | 0.5 | 0.7 | 0.8 | 0.8 | 1 | 1.1 | 0.8 | 0.8 | 1 | 0.9 | 0.6 | 0.5 | 0.4 | 0.3 | 0.2 |
| 6' | 0.4 | 0.5 | 0.7 | 0.7 | 0.8 | 0.8 | 0.6 | 0.5 | 0.6 | 0.5 | 0.4 | 0.4 | 0.3 | 0.2 | 0.2 |
| | 7 | 6 | 5 | 4 | 3 | 2 | 1 | 0 | 1 | 2 | 3 | 4 | 5 | 6 | 7 | 8 |

*Meets NFPA 101 Requirements for: 10' center-to-center spacing - 3' path of egress 1' from wall - 7 1/2' mounting height.*