EAGLE SERIES

LED FLOOD LIGHT

SPECIFICATIONS

- EAGLE is designed for exterior or sports lighting , a superior high output, high efficiency LED flood light, featuring a unique optical design that virtually eliminates glare with minimal impact on performance. It is available in a variety of flood distributions for lighting applications such as large areas, port and rail centers, exterior or sports

CONSTRUCTION

- Heavy duty die-cast aluminum housing
- Driver compartment can be either installed onto or separated from the light fixture
- Light engine is thermally isolated from driver component
- UV stabilized polyester powder paint finish
- Horizontal and vertical aiming

OPTICAL / ELECTRICAL

- Four distributions to maximize performance:15°, 30°, 60°, 90°
- -40℃~50℃ operating temp range
- 20KV surge protection device standard
- 1-10V dimming driver standard
- 100-277V operation 50/60HZ standard, 200-480V 50/60HZ optional

ADJUSTABLE BRACKETS

- Vertical and horizontal angle indicator available

UNIFIED GLARE RATING

- Glare has always been a concern with LED products and it has got increasingly more attention with higher output fixtures. The standard low glare shield blocks lights outside of the main beam, so from other viewing angles the fixture virtually disappears. The low glare shields are also designed to have minimum impact on the total light output

FINISH

- Rugged, weather-tight design and 3G Vibration ratings ensure durability even in harsh environments

LED

- Modular optical assemblies enable 3 unique performance packages
- 50K lumens, 300Watts
- 60K lumens, 400Watts
- 70K lumens, 460Watts
- 3000K, 4000K, 5000K, 5700K, 6500K CCT
- Minimum CRI of 70, 80 and 90 optional

up to 170lm/w

FIXTURE DIMENSIONS

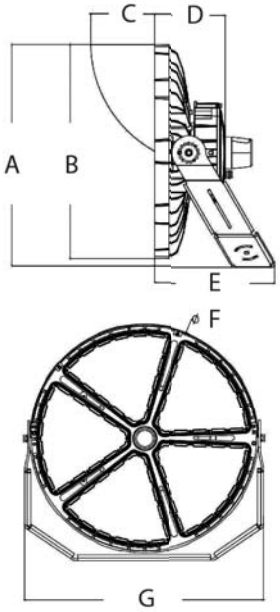

A	B	C	D
57.3cm/23"	ϕ55.4cm/22"	16.5cm/6"	18.6cm/7"
E	**F**		**G**
31.3cm/12"	55.6cm/22"		58.1cm/23"

CERTIFICATIONS/LISTINGS

ORDERING INFORMATION

EAG - [ ] - [ ] - [ ] - [ ] - [ ] - [ ] - [ ] - [ ] - [ ]

WATTS	VOLTAGE	LED CHIPS	TYPE OF SENSOR	CCT&CRI	DISTRIBUTION	DRIVER	MOUNT	OPTIONS
300	NV=100-277V	L5=LUMILEDS5050	00=Without Sensor	3070=3000K 70CRI	15D=15deg	INTEGRAL	UNDER MOUNT YOKE	10KV SPD
400	HV=347/480V	O5=OSRAM5050	SN=Motion sensor	4070=4000K 70CRI	30D=30deg	REMOTE		20KV SPD
460			PH=Photocell	5070=5000K 70CRI	60D=60deg			
			DV=Dimmable	5770=5700K 70CRI	90D=90deg			
				3080=3000K 80CRI				
				4080=4000K 80CRI				
				5080=5000K 80CRI				
				5780=5700K 80CRI				

EAGLE SERIES

LED FLOOD LIGHT

1. Light shield
2. Tiltable arm
3. Light source: top level performance LEDs, system sfficacy up to 170lm/w
4. Space reserved for photocell sensor
5. Die casting fixture body
6. Gasket
7. Top level performance driver 1-10V dimmable
8. Driver box cover
9. 0 - ±90° Rotatabl bracket

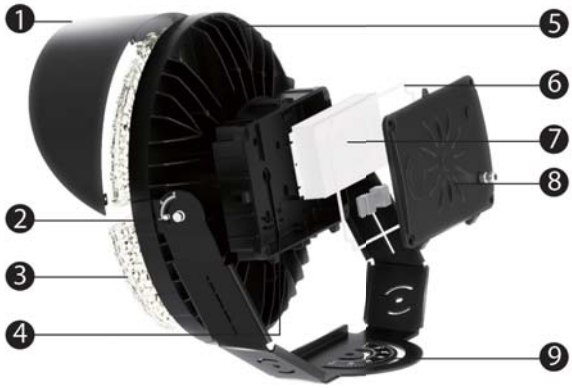

TECHNICAL SPECIFICATIONS @5000K

MODEL	WATTS	Replace MHL	LUMEN OUTPUT / OPTICS	IP & IK	FIXTURE DIMENSION	NW
EAG -300	300	1000W	45925lm / 15° 51536lm / 30° 50487lm / 60°	IP65&IK08	23*12*23" (58*31*58cm)	44lbs(20kgs)
EAG-400	400	1200W	56222lm / 15° 65915lm / 30° 65032lm / 60°	IP65&IK08	23*12*23" (58*31*58cm)	44lbs(20kgs)
EAG-460	460	1500W	61112lm / 15° 73004lm / 30° 74136lm / 60°	IP65&IK08	23*12*23" (58*31*58cm)	44lbs(20kgs)

PHOTOMETRY

15degree	30degree	60degree

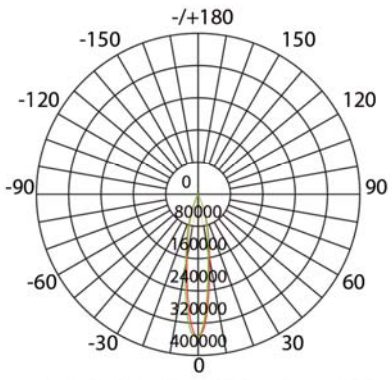

AVERAGE BEAM ANGLE(50%):18.2DEG
UNIT:cd
C0/180 Ic:353054 9.2,9.1
C90/270 Ic:354895 10.0,8.2

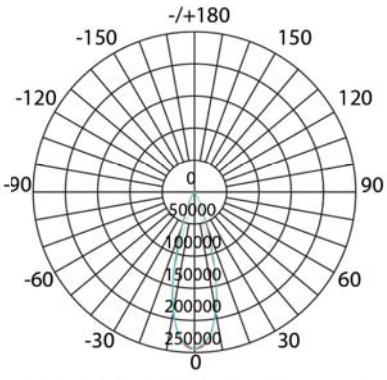

AVERAGE BEAM ANGLE(50%):29.8 DEG
UNIT:cd
C0/180,29.5deg
C60/240,29.9deg
C30/210,29.6deg
C90/270,30.1deg

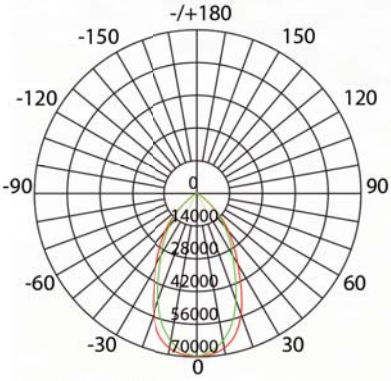

AVERAGE BEAM ANGLE(50%):57.4 DEG
UNIT:cd
C0/180 Ic:69654 30.1,30.1
C90/270 Ic:69607 27.3,27.3

SPECIFICATIONS AND DETAILS ARE SUBJECT TO CHANGE WITHOUT NOTIFICATION, CONTACT AOK FOR UP-TO-DAET DETAILS.

LOADING	
WEIGHT(LBS)	44
EPA HORIZONTAL	3.3
EPA 25DEG DOWN	3.05

HIGH MAST LIGHTING

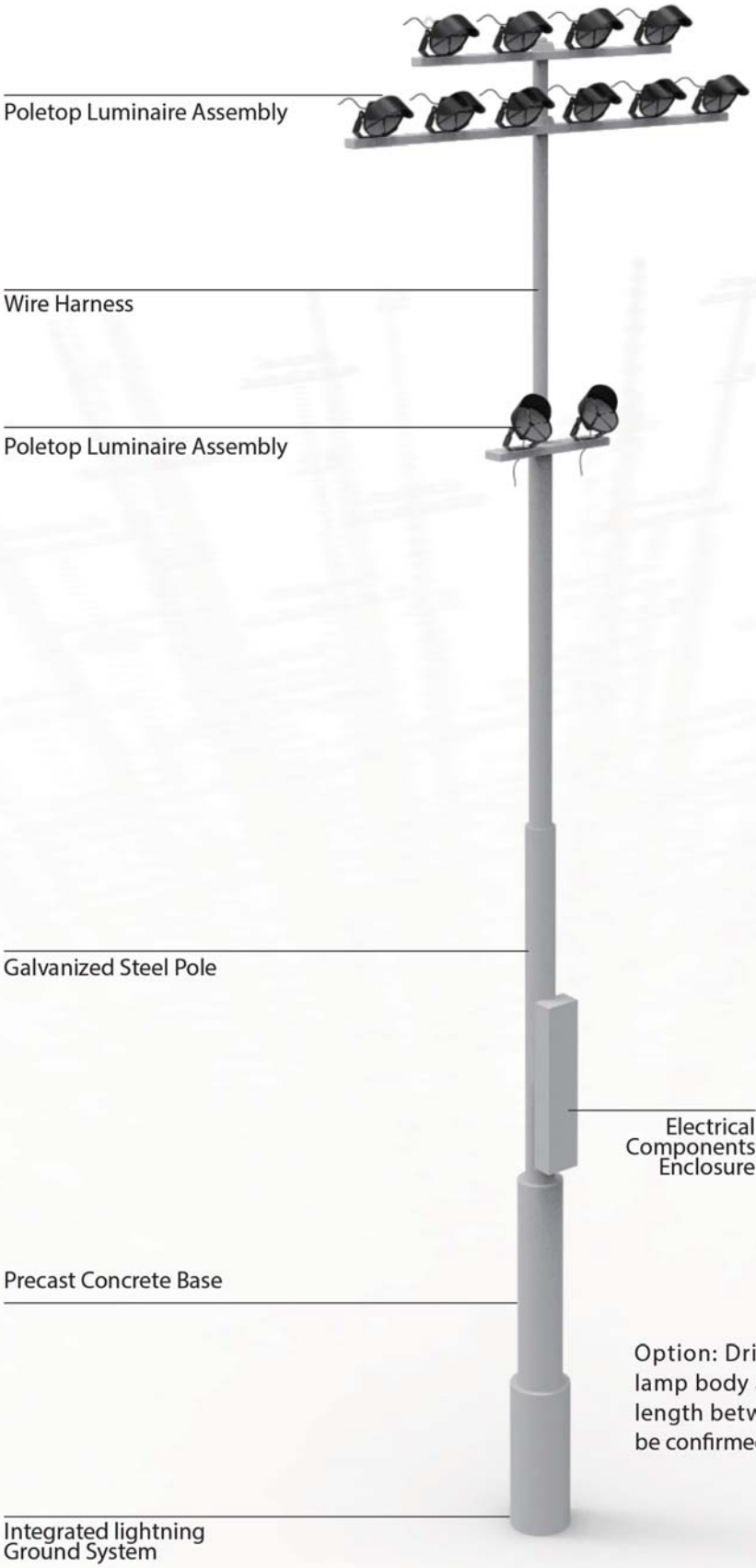

Option: Drivers installed remotely from the lamp body and stay in reserved space. (cable length between lamp body and driver should be confirmed beforehand)