APM-LEDPNL2X4-35W-PRM-ECO

Premium Performance 35 Watt
2x4 Ultra-Thin Edge-Lit LED Panel

Project:	
Type:	
Catalog #:	

STANDARD

The premium-performance, ultra-thin, edge-lit LED panel (APM-LEDPNL-PRM-ECO) series offers industry-leading lumens watt (LPW). It is designed to deliver general ambient lighting in a variety of indoor settings, including schools, offices, hospitals and stores, and is the perfect choice for both new construction and retrofits. This high-efficacy luminaire provides long-life and uniform illumination, as well as standard 0-10 vdc dimming capability.

FEATURES

- *Available in 3000k (warm white), 3500k (warm/neutral white), 4000k (neutral white) and 5000k (cool white) color temperatures.**
- *Long-life LEDs provide 188,000 hours of operation with at least 70% of initial lumen output (L_{70}).***
- *Provides 4,505 luminaire lumens (129 lumens per watt, LPW) at 3000k; 4,610 luminaire lumens (132 LPW) at 3500k; 4,715 luminaire lumens (135 LPW) at 4000k, and 4,924 luminaire lumens (141 LPW) at 5000k.**
- *Uniform illumination with no visible LED pixilation.*
- *Universal 120-277 AC voltage (50-60Hz) is standard.*
- *0-10vdc dimming capability is standard.*
- *Power factor > 0.90.*
- *Total harmonic distortion < 20%.*
- *Color rendering index > 80.*
- *Aluminum housing.*
- *PMMA (polymethyl methacrylate) light guide panels for optimal light distribution, efficiency and longevity.*
- *Easy installation in new construction or retrofit.*
- *Standard earthquake clips provide secure installation in grid ceilings.*
- *Standard mounting options include recessed mounting in grid ceilings, or suspended mounting using attached hanging brackets. For mounting in plaster or other hard ceiling, see Mounting Kits.*

** Contact factory for other color temperatures and lumen packages.*
*** L_{70} hours are IES TM-21-11 calculated hours.*

WARRANTY & LISTINGS

- *$_c$ETL$_{US}$ listed for damp locations and insulated ceilings (IC-rated) for use in ambient temperatures from -25°C to 45°C (-13°F to 113°F).*
- *DLC premium approved.*
- *Flicker-free per IEEE1789-2015 (no observable adverse effects of flicker at 100% light output level).*
- *Complies with RoHS (Restriction on Hazardous Substances) requirements.*
- *Complies with FCC Part 15, part B.*
- *Complies with IEEE C.62.41, input transient protection (1kV).*
- *5-year warranty of all electronics and housing.*

MOUNTING KITS

- *Optional surface mounting kits (LEDSMKT-24), and flange mounting kits (FLANGEKIT24-ET) provide for installation on plaster or other hard ceilings.*
- *Optional cable mounting kits (LEDPNL-CMK) provide additional security, as well as suspended mounting.*

DIMENSIONS

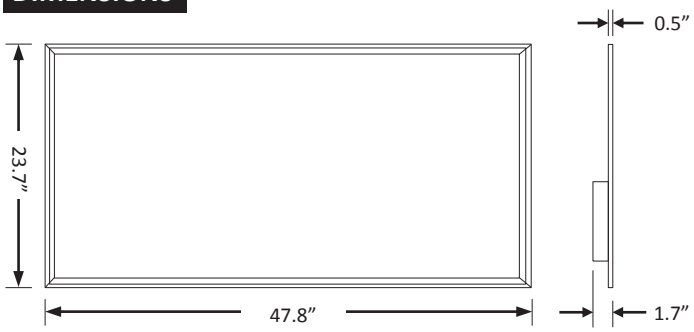

Weight: 11.5 lbs.

ORDERING INFORMATION

Example: APM-LEDPNL2X4-35W-3KMV-PRM-ECO + LEDSMKT-24 + LEDPNL-EMBRKT

Model	Luminaire Watts	Luminaire Lumens	Lumens/ Watt	Color Temperature	Input Voltage	Accessories (Order Separately)
APM-LEDPNL2X4-35W	35	4,505	129	3K = 3000k	MV-PRM-ECO = Multi-volt (120-277V)	LEDSMKT-24 = Surface Mounting Kit (2x4)
		4,610	132	35K = 3500K		FLANGEKIT24-ET = Flange Mounting Kit (2x4)
		4,715	135	4K = 4000k		LEDPNL-CMK = Cable Mounting Kit, Quantity 6, 1 meter long, 1/16” diameter, with spring clips & adjustable locking ceiling attachment
		4,924	141	5K = 5000k		LEDPNL-EMBRKT = Bracket for emergency battery backup unit

APM-LEDPNL2X4-35W-PRM-ECO

Premium Performance 35 Watt
2x4 Ultra-Thin Edge-Lit LED Panel

ELECTRICAL DATA

Model	Color Temp.	CRI [1]	Luminaire Lumens	Luminaire Watts	Lumens Per Watt	Input Voltage[2]	Input Current (A)			Power Factor	THD[3]	L_{70} Hours[4]
							120V	240V	277V			
APM-LDPNL2X4-35W-3KMV-PRM-ECO	3000k	> 80	4,505	35	129	120-277	0.29	0.15	0.13	> 0.90	< 20%	188,000
APM-LDPNL2X4-35W-35KMV-PRM-ECO	3500k	> 80	4,610	35	132	120-277	0.29	0.15	0.13	> 0.90	< 20%	188,000
APM-LDPNL2X4-35W-4KMV-PRM-ECO	4000k	> 80	4,715	35	135	120-277	0.29	0.15	0.13	> 0.90	< 20%	188,000
APM-LDPNL2X4-35W-5KMV-PRM-ECO	5000k	> 80	4,924	35	141	120-277	0.29	0.15	0.13	> 0.90	< 20%	188,000

[1] Color rendering index.
[2] All 50-60Hz.
[3] Total harmonic distortion.
[4] L_{70} refers to the number of hours at which lumen output declines to 70% of the initial level. L_{70} hours are IES TM-21-11 calculated hours.

PHOTOMETRIC DATA

APM-LEDPNL2X4-35W-5KMV-PRM-ECO (4,924 Lumens)

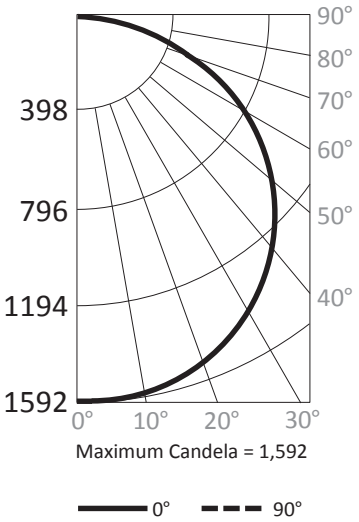

Candlepower Summary

	0°	90°
0°	1,592	1,592
10°	1,565	1,562
20°	1,500	1,486
30°	1,396	1,362
40°	1,251	1,191
50°	1,058	977
60°	815	723
70°	529	443
80°	219	166
90°	0	0

Zonal Lumen Summary

Zone	Lumens	% Fixture
0° - 10°	151	3.1%
0° - 20°	587	11.9%
0° - 30°	1,258	25.5%
0° - 40°	2,085	42.3%
0° - 50°	2,969	60.3%
0° - 60°	3,792	77.0%
0° - 70°	4,439	90.1%
0° - 80°	4,818	97.8%
0° - 90°	4,924	100.0%
90° - 180°	0	0.0%
0° - 180°	**4,924**	**100.0%**

Cone of Light

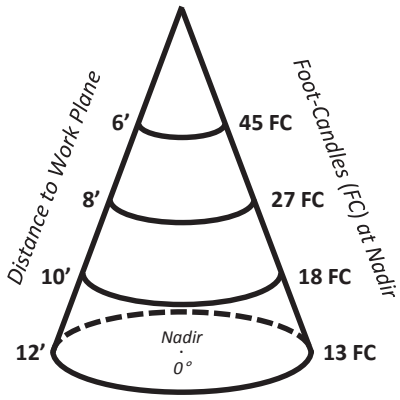

OPTIONS

- *Optional surface mounting kits (LEDSMKT-24) mounts below the ceiling.*
- *Optional flange mounting kits provide for recessed installation on plaster or other hard ceilings. Attach Flange Mount Kit (FLANGEKIT24-ET) to ceiling joists or other stationary structures, and the panel is mounted flush to the ceiling.*
- *Optional cable mounting kits provide additional security, as well as suspended mounting. Attach one end of the Cable Mount Kit (LEDPNL-CMK) to luminaire earthquake clips using spring clips, and attach the other end to stationary structures using the adjustable, locking ceiling attachment (see picture below right).*
- *Optional bracket for emergency battery backup unit (LEDPNL-EMBRKT) provides structural support to prevent panels from bending when the battery backups are installed.*

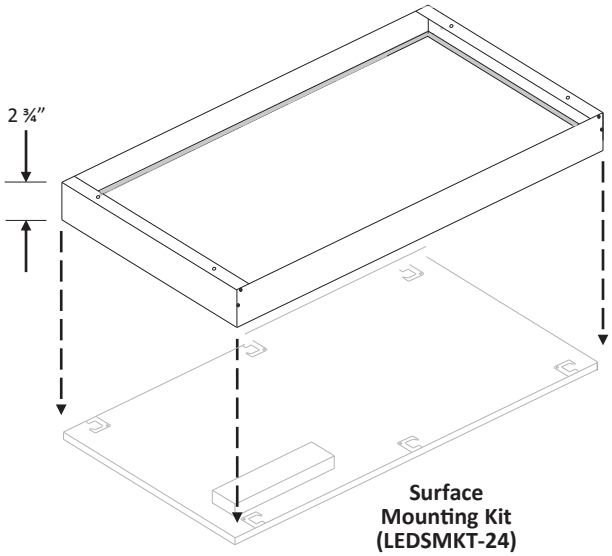

Surface Mounting Kit (LEDSMKT-24)

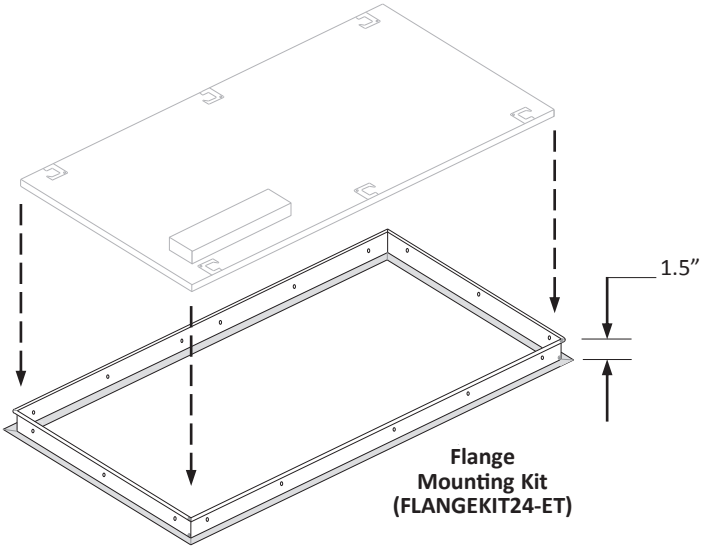

Flange Mounting Kit (FLANGEKIT24-ET)

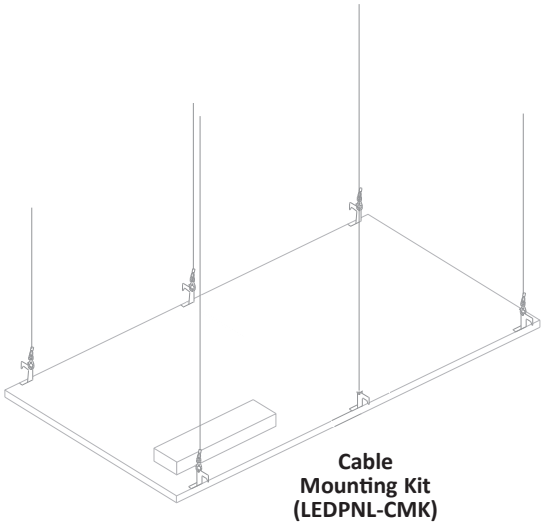

Cable Mounting Kit (LEDPNL-CMK)

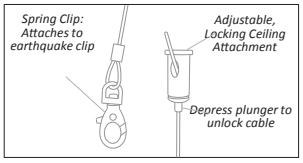

Cable Mount Kit:
- *Spring Clip*
- *Adjustable, locking ceiling attachment*

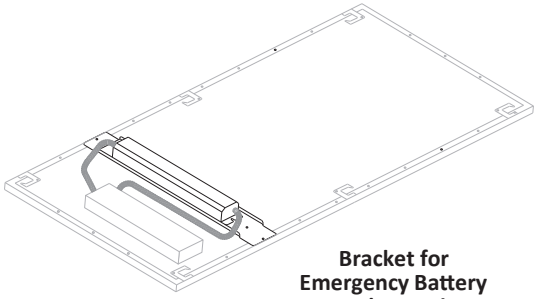

Bracket for Emergency Battery Backup Unit (LEDPNL-EMBRKT)