# APM-LEDPNL1X4-32W-PRM-ECO

Premium Performance 32 Watt
1x4Edge-Lit LED Panel

| | |
|---|---|
| Project: | |
| Type: | |
| Catalog #: | |

***STANDARD***

The premium-performance, ultra-thin, edge-lit LED panel (APM-LEDPNL-PRM-ECO) series offers industry-leading lumens watt (LPW). It is designed to deliver general ambient lighting in a variety of indoor settings, including schools, offices, hospitals and stores, and is the perfect choice for both new construction and retrofits. This high-efficacy luminaire provides long-life and uniform illumination, as well as standard 0-10 vdc dimming capability.

## FEATURES

- *Available in 3000k (warm white), 3500k (warm/neutral white), 4000k (neutral white) and 5000k (cool white) color temperatures.**
- *Long-life LEDs provide 238,000 hours of operation with at least 70% of initial lumen output ($L_{70}$).***
- *Provides 4,096 luminaire lumens (128 lumens per watt, LPW) at 3000k; 4,113 luminaire lumens (129 LPW) at 3500k; 4,131 luminaire lumens (129 LPW) at 4000k, and 4,165 luminaire lumens (130 LPW) at 5000k.**
- *Uniform illumination with no visible LED pixilation.*
- *Universal 120-277 AC voltage (50-60Hz) is standard.*
- *0-10vdc dimming capability is standard.*
- *Power factor > 0.90.*
- *Total harmonic distortion < 20%.*
- *Color rendering index > 80.*
- *Aluminum housing.*
- *PMMA (polymethyl methacrylate) light guide panels for optimal light distribution, efficiency and longevity.*
- *Easy installation in new construction or retrofit.*
- *Standard earthquake clips provide secure installation in grid ceilings.*
- *Standard mounting options include recessed mounting in grid ceilings, or suspended mounting using attached hanging brackets. For mounting in plaster or other hard ceiling, see Mounting Kits.*

** Contact factory for other color temperatures and lumen packages.*
*** $L_{70}$ hours are IES TM-21-11 calculated hours.*

## WARRANTY & LISTINGS

- *$_{c}$ETL$_{US}$ listed for damp locations and insulated ceilings (IC-rated) for use in ambient temperatures from -25°C to 45°C (-13°F to 113°F).*
- *DLC premium approved.*
- *Flicker-free per IEEE1789-2015 (no observable adverse effects of flicker at 100% light output level).*
- *Complies with RoHS (Restriction on Hazardous Substances) requirements.*
- *Complies with FCC Part 15, part B.*
- *Complies with IEEE C.62.41, input transient protection (1kV).*
- *5-year warranty of all electronics and housing.*

## MOUNTING KITS

- *Optional surface mounting kits (LEDSMKT-14), and flange mounting kits (FLANGEKIT14-ET) provide for installation on plaster or other hard ceilings.*
- *Optional cable mounting kits (LEDPNL-CMK) provide additional security, as well as suspended mounting.*

## DIMENSIONS

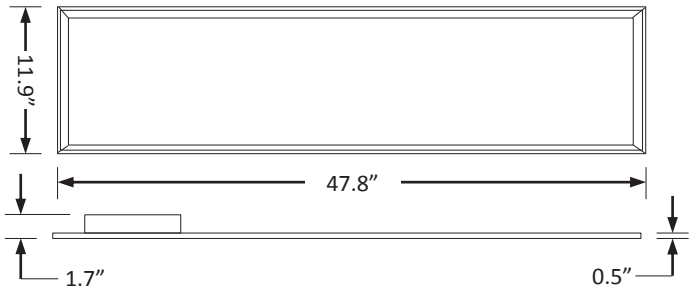


***Weight: 6.6 lbs.***

## ORDERING INFORMATION

**Example:** APM-LEDPNL1X4-32W-3KMV-PRM-ECO + LEDSMKT-14 + LEDPNL-CMK

| Model | Luminaire Watts | Luminaire Lumens | Lumens/ Watt | Color Temperature | Input Voltage | Accessories (Order Separately) |
|---|---|---|---|---|---|---|
| APM-LEDPNL1X4-32W | 32 | 4,096<br>4,113<br>4,131<br>4,165 | 128<br>129<br>129<br>130 | 3K = 3000k<br>35K = 3500K<br>4K = 4000k<br>5K = 5000k | MV-PRM-ECO = Multi-volt (120-277V) | LEDSMKT-14 = Surface Mounting Kit (1x4)<br>FLANGEKIT14-ET = Flange Mounting Kit (1x4)<br>LEDPNL-CMK = Cable Mounting Kit, Quantity 6, 1 meter long, 1/16” diameter, with spring clips, and adjustable locking ceiling attachment |

# APM-LEDPNL1X4-32W-PRM-ECO

Premium Performance 32 Watt
1x4Edge-Lit LED Panel

## ELECTRICAL DATA

| Model | Color Temp. | CRI [1] | Luminaire Lumens | Luminaire Watts | Lumens Per Watt | Input Voltage[2] | Input Current (A) | | | Power Factor | THD[3] | $L_{70}$ Hours[4] |
|---|---|---|---|---|---|---|---|---|---|---|---|---|
| | | | | | | | 120V | 240V | 277V | | | |
| APM-LEDPNL1X4-32W-3KMV-PRM-ECO | 3000k | > 80 | 4,096 | 32 | 128 | 120-277 | 0.27 | 0.13 | 0.12 | > 0.90 | < 20% | 238,000 |
| APM-LEDPNL1X4-32W-35KMV-PRM-ECO | 3500k | > 80 | 4,113 | 32 | 129 | 120-277 | 0.27 | 0.13 | 0.12 | > 0.90 | < 20% | 238,000 |
| APM-LEDPNL1X4-32W-4KMV-PRM-ECO | 4000k | > 80 | 4,131 | 32 | 129 | 120-277 | 0.27 | 0.13 | 0.12 | > 0.90 | < 20% | 238,000 |
| APM-LEDPNL1X4-32W-5KMV-PRM-ECO | 5000k | > 80 | 4,165 | 32 | 130 | 120-277 | 0.27 | 0.13 | 0.12 | > 0.90 | < 20% | 238,000 |

[1] Color rendering index.
[2] All 50-60Hz.
[3] Total harmonic distortion.
[4] $L_{70}$ refers to the number of hours at which lumen output declines to 70% of the initial level. $L_{70}$ hours are IES TM-21-11 calculated hours.

## PHOTOMETRIC DATA

### APM-LEDPNL1X4-32W-5KMV-PRM-ECO (4,165 Lumens)

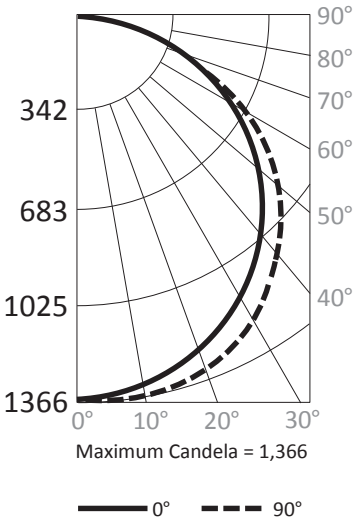


**Candlepower Summary**

| | 0° | 90° |
|---|---|---|
| **0°** | 1,366 | 1,366 |
| **10°** | 1,364 | 1,367 |
| **20°** | 1,329 | 1,323 |
| **30°** | 1,257 | 1,229 |
| **40°** | 1,144 | 1,086 |
| **50°** | 982 | 896 |
| **60°** | 768 | 666 |
| **70°** | 507 | 413 |
| **80°** | 211 | 159 |
| **90°** | 0 | 0 |

**Zonal Lumen Summary**

| Zone | Lumens | % Fixture |
|---|---|---|
| **0° - 10°** | 129 | 3.1% |
| **0° - 20°** | 500 | 12.0% |
| **0° - 30°** | 1,074 | 25.8% |
| **0° - 40°** | 1,779 | 42.7% |
| **0° - 50°** | 2,529 | 60.7% |
| **0° - 60°** | 3,223 | 77.4% |
| **0° - 70°** | 3,765 | 90.4% |
| **0° - 80°** | 4,080 | 97.9% |
| **0° - 90°** | 4,165 | 100.0% |
| **90° - 180°** | 0 | 0.0% |
| **0° - 180°** | **4,165** | **100.0%** |

**Cone of Light**

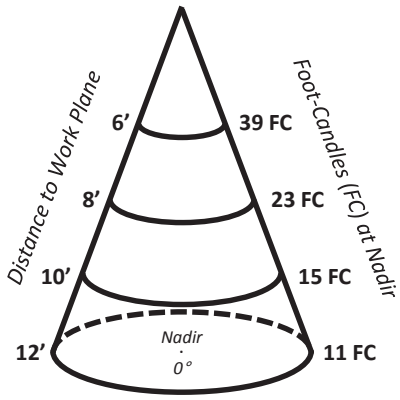

## OPTIONS

- *Optional surface mounting kits (LEDSMKT-14) mounts below the ceiling.*
- *Optional flange mounting kits provide for recessed installation on plaster or other hard ceilings. Attach Flange Mount Kit (FLANGEKIT14-ET) to ceiling joists or other stationary structures, and the panel is mounted flush to the ceiling.*
- *Optional cable mounting kits provide additional security, as well as suspended mounting. Attach one end of the Cable Mount Kit (LEDPNL-CMK) to luminaire earthquake clips using spring clips, and attach the other end to stationary structures using the adjustable, locking ceiling attachment (see picture below right).*

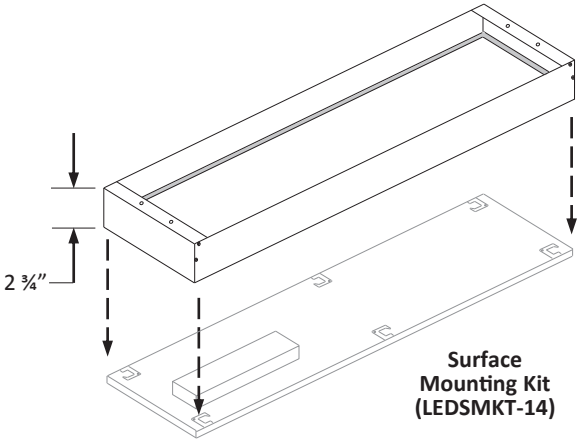


**Surface Mounting Kit (LEDSMKT-14)**

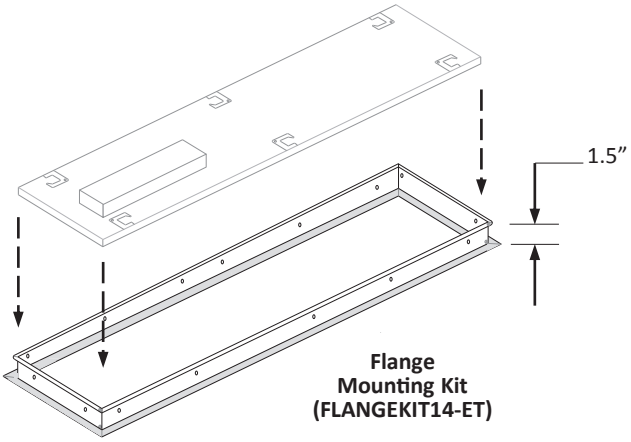


**Flange Mounting Kit (FLANGEKIT14-ET)**

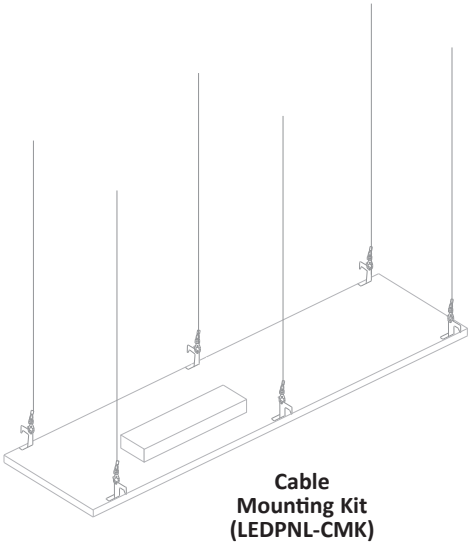

**Cable Mounting Kit (LEDPNL-CMK)**

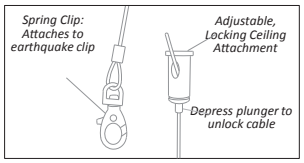


*Cable Mount Kit:*
- *Spring Clip*
- *Adjustable, locking ceiling attachment*