Maritron Series

Hazardous Location Surface Mount LED Light

Project:	
Type:	
Catalog # :	

FME Lighting | 877 - 234 - 8460 | info@fmelighting.com

CERTIFIED UL 1598 UL924 EMERGENCY LIGHTING UL844 IP66 IK10

1x2

2x2

1x4

2x4

SPECIFICATIONS OVERVIEW

VOLTAGE	AC120-277V / AC200-480V
COLOR TEMP	3500K/4000K/5000K/5700K Kelvin
HOUSING & HARDWARE	• 6063 Aluminum Alloy with Powder Coat Finish • Stainless steel
LENS	PC
WATERPROOF SEALING RING	Polytetrafluoroethylene (PTFE)
AMBIENT TEMP	-40°C to +60°C | T4
BEAM ANGLES	120°
POWER SUPPLY	Built-in power supply
RATED POWER: EMERGENCY MODE	8W
EMERGENCY TIME	>90 minutes
PROTECTION	• Over-voltage, over-current & short-circuit protection • IP66 / IK10
DIMMING	Dimmable
WARRANTY	5 Year Limited Warranty

MRT A - 1 ft x 2 ft

WATTAGE	40W
DIMENSIONS (L,W,H)	605 x 275 x 95mm

MRT B - 1 ft x 4 ft

WATTAGE	40W/60W
DIMENSIONS (L,W,H)	275 x 1215 x 95mm

MRT C - 2 ft x 2 ft

WATTAGE	40W/60W/80W
DIMENSIONS (L,W,H)	605 x 605 x 95mm

MRT D - 2 ft x 4 ft

WATTAGE	60W/80W/100W/120W/150W/200W
DIMENSIONS (L,W,H)	605 x 1215 x 95mm

CERTIFICATIONS / RATINGS

- Class I Division 2
  Groups A, B, C, D
- Class I, Zone 2
  Group IIA, IIB, IIC
- UL 844 Testing: Standard
- UL 1598 Wet Locations
- UL 924 Emergency Lighting
- IP66
- IK10

KEY FEATURES & BENEFITS

- The ideal choice for marine and hazardous applications requiring a linear design.
- Available in 4 sizes.
- Optional emergency battery backup for uninterrupted functionality.
- Exceptional water and dust resistance with an IP66 rating.
- Ideal for marine environments, wet locations, and areas requiring hose-down.

LUMENS & OPTICS

Model	Lumens per Watt
MRT	130lm/W

Model	Output
MRT A	5200lm
MRT B	5200-7800lm
MRT C	5200-10400lm
MRT D	7800-26,000lm

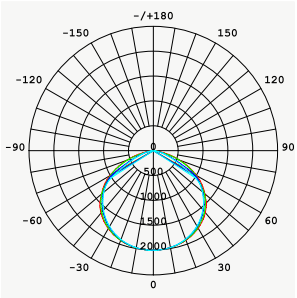

120 Degree

ORDERING INFORMATION

ORDERING GUIDE

Series	Housing Dimension	Wattage	Voltage	CCT	Dimming	Mounting
MRT	A = 1 ft x 2 ft	4 = 40W	LV1 = AC120-277V HV1 = AC200-480V	S = 3500K I = 4000K C = 5000K K = 5700K	Y = Dimmable N = Non-dimming	RM = Recessed Mount PM = Pedant Mount CM = Ceiling Mount
	B = 1 ft x 4 ft	4 = 40W 6 = 60W				
	C = 2 ft x 2 ft	4 = 40W 6 = 60W 8 = 80W				
	D = 2 ft x 4 ft	6 = 60W 8 = 80W 10 = 100W 12 = 120W 15 = 150W 20 = 200W				

Maritron Series

Hazardous Location Surface Mount LED Light

FME Lighting | ILLUMINATING INDUSTRIAL APPLICATIONS

	MRT A 1 ft x 2 ft	MRT B 1 ft x 4 ft	MRT C, 2 ft x 2 ft	MRT D 2ft x 4ft
Electrical Specifications:				
Rated Power in Normal Mode	40W	40W/60W	40W/60W/80W	60W/80W/100W/ 120W/150W/200W
Rated Power in Emergency Mode	8W			
Input Voltage	AC120-277V/AC200-480V			
Input Frequency	50/60Hz			
Emergency Time	>90 minutes			
Power Supply	Built-in power supply			
Power Protection	Over-voltage over-current and short-circuit protection			
Optical Specifications:				
Lumen Output	5200lm	5200-7800lm	5200-10400lm	7800-26000lm
Lumens Per Watt	130lm/W			
Beam Angle	120°			
CCT	3500K/4000K/5000K/5700K			
Product & Package Dimensions:				
Product Dimensions (LxWxH)	605x275x95mm / 23.8X10.8X3.7inch	275x1215x95mm / 1.8x47.8x3.7inch	605x605x95mm / 23.8x23.8x3.7inch	605x1215x95mm / 23.8x47.8x3.7inch
Quantity	1 pc			
Gross Weight	9kg/19.8lb	20kg/44lb	21kg/46.3lb	40kg/88.2lb
Package Dimensions (LxWxH)	700x350x175mm / 27.6x13.8x6.9inch	1320x350x175mm / 52x13.8x6.9inch	700x680x175mm / 27.6x26.8x6.9inch	1320x680x175mm / 52x26.8x6.9inch

VERSATILE APPLICATION

- Manufacturing Plants, Chemical/Pharmaceutical Facilities, Loading Platforms, Food/ Alcohol Factories, And Paper Mills.

PRODUCT DIMENSIONS (mm/inch)

MRT A

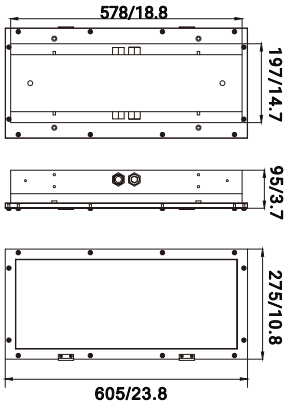

MRT B

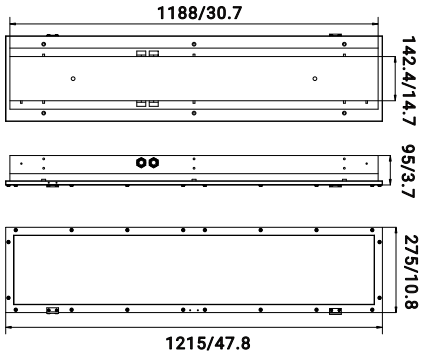

MRT C

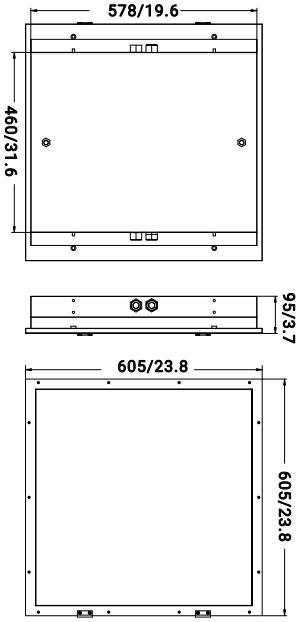

MRT D

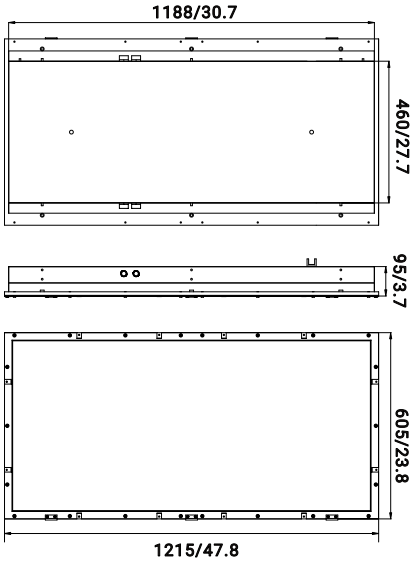

MOUNTING AND ACCESSORIES

- Pendant Mounting (PM)
(Standard Mounting for Stock)

- Ceiling Mounting (CM)

- Recessed Mounting (RM)

- Accessories

Lifting Ring x2

1 Meter Hanging Chain x2