LGE Series

Explosion-Proof Edge Lit LED Exit Sign

Project:	
Type:	
Catalog # :	

FME Lighting | 877 - 234 - 8460 | info@fmelighting.com

c UL us LISTED | HazLoc | ABS | IP66

SPECIFICATIONS

VOLTAGE	100-277VAC, 60Hz, 0.5A
WATTAGE	3W,5W
LED COLORS	Red & Green
AMBIENT TEMP	20°C to +60°C (68°F to 140°F)
HOUSING	Housing: Aluminum Hardware/Mounting Sling: Stainless steel
PLATE	Tempered Glass
CRI	>80
BEAM ANGLE	180°
LED LIFESPAN	50,000 hours
EMERGENCY TIME	3 Hour Emergency Operation
CHARGE TIME	24 Hours
PROTECTION	IP66
DIMMING	None Dimmable
WARRANTY	5 Year Limited Warranty

RATING & CERTIFICATIONS

- Class I, Division 2
Groups A, B, C, D
- Class II, Division 1
Groups E, F, G
- Class II, Division 2
Groups F, G
- Class III
- UL 844 Hazardous Locations*
- UL 924*
- ABS
- IP66

**5W is rated UL844 and UL924*

KEY FEATURES

- **Environmental Suitability:** Suitable for wet locations.
- **Design:** Lightweight and compact structure.
- **Integration:** Integrated junction box for driver with emergency backup.
- **Efficiency:** Low energy consumption.
- **Durability:** Stainless steel exposed fasteners with high corrosion resistance.
- **Customization:** Alternate exit legend and languages available.
- **Battery:** Sealed unit; battery is not replaceable—entire exit sign must be replaced when necessary.

DIMENSIONS

**See Page 2 for All Diagrams.*

ORDERING INFORMATION

ORDERING GUIDE

Series	Wattage	Voltage	LED Color	Mounting
LGE	3 = 3W 5 = 5W	LV = 100-277VAC	R = Red LEDs G = Green LEDs	WM = Wall Mount PM = Pedant Mount PIM = Pipe/Conduit Mount

Notes:
**Standard Stock is 3W (Green)*
**5W is rated UL844 and UL924*

DIMENSIONS

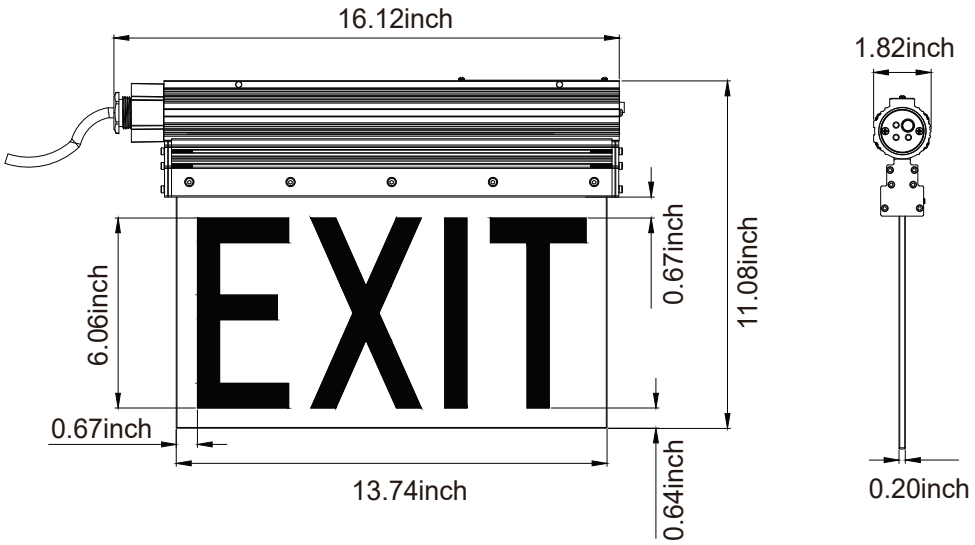

Packing Information:

Model	Quantity/Carton	Packing Size	Net Weight	Gross Weight
LGE Series	2 Pcs	18.50x18.50x10.24inch	7.28 lbs	15.43 lbs

MOUNTING

WM: Wall Mounting (**Standard**):

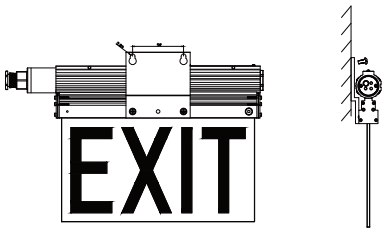

PM: Pendant Mounting:

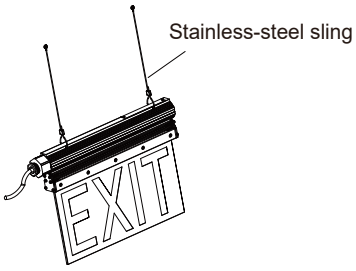

PIM: Pipe/Condiut Mounting:

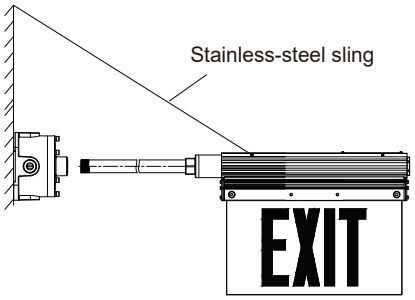

Fix Plate

Mounting Sling

Straight Pipe

Mounting Sling

INSTRUCTIONS

Explanation of Indicator Lights:

General Reset Instructions:

•If three or two indicator lights remain on during initial power-up, reset them by…

- Press the switch "ON" holding it for 5 to 6 seconds. ->OFF ->ON.
- Then turning the switch “OFF”, then "ON".

RED:

•Fast charging for 2 hours.

•Charging indicator, battery capacity from 20% to 80%.

GREEN:

•Trickle charging.

•Charging indicator,battery capacity from 80% to 100%.

•Green light remains on when the battery is disconnected.

RED and GREEN:

The red and green lights flash alternately for 5 minutes, indicating the battery is at 80% capacity.

YELLOW:

•Indicates battery discharge below 20%.

•***If the yellow light remains on under any condition, the product is considered out of order.***

Description of Switch:

Activation:

•Press the "ON" switch once; the EXIT sign and indicator light will flash once, with an ON/OFF interval of 10 seconds.

Manual Off:

•With mains electricity disconnected, press and hold the switch for 3 to 5 seconds to turn off the product.

•If the EXIT sign needs to be turned on again, it will be activated through mains electricity.

Monthly Inspection:

•The product will automatically perform a monthly inspection.

•The EXIT sign and indicator light will flash once every 30 or 31 days.

Annual Inspection:

•The product will automatically undergo an annual inspection.

•The EXIT sign and indicator light will flash twice every year.

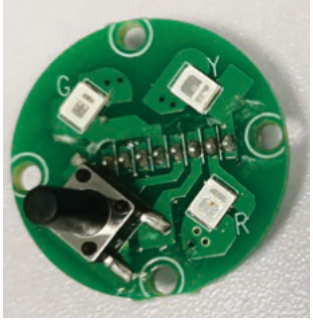

Image: Indicator light LED and Tact Switch