LFL Series

Explosion Proof LED Flood Light

Project:	
Type:	
Catalog # :	

FME Lighting | 877 - 234 - 8460 | info@fmelighting.com

IP66
IP67
IK09

LFL-1

LFL-2

LFL-3

SPECIFICATIONS

VOLTAGE	100-277V , 277-480VAC
WATTAGE	100W, 150, 200W, 250W
COLOR TEMP	3000K/4000K/5000K Kelvin
HOUSING & HARDWARE	• ADC12 Aluminum Alloy • Stainless steel
LENS	Tempered Glass
AMBIENT TEMP	-40°C to +60°C
BEAM ANGLES	40°, 60°, 90° & 120°
LIFESPAN	50,000 hours lifespan
AMBIENT TEMPERATURE	-40℃ to 60℃ (-40℉ to 140℉)
PROTECTION	IP67/IP66 | IK09
WARRANTY	5 Year Limited Warranty

CERTIFICATIONS

- Class I, Division 2
  Groups A, B, C, D
- Class II, Division1
  Groups E, F, G
- Class II, Division 2
  Groups F, G
- Class III
- Ul1598
- UL1598A
- IP66/IP67
- IK09

KEY FEATURES

• Ideal for a wide range of industries: oil and gas, chemical, marine, aerospace, metal treatment, food and alcohol, and more.

• Operates in extreme temperatures ranging from -40°C (-40°F) to 60°C (140°F).

• Waterproof and dust-proof design with IP66/IP67 rating eliminates the need for internal cleaning and maintenance.

• Simple structure facilitates easy and quick installation.

• Tailored for high humidity, high dust, high temperature, and vapor-rich environments.

DIMENSIONS, OPTICS & LUMENS

**See Page 3 for All Dimensions Diagrams.*
**See Page 2 for All Photometerics.*

ORDERING INFORMATION

ORDERING GUIDE

Series	Version	Wattage	Voltage	CCT	Beam Angle	Dimming	Mounting	Accessory
LFL	1	20 = 200W 25 = 250W	LV = 100-244VAC HV = 277-480VAC	S = 3000K I = 4000K C = 5000K	W = 40 X = 60 Y = 90 Z = 120	D = 0-10V Dimmable ND = None Dimming	TM = Trunnion mounting kit: Standard SF = Slip fitter mounting kit AMA = Adjustable Arm mounting kit A AMB = Adjustable Arm mounting kit B	B1 = Hardware mounting bracket* B2 = Light pole mounting bracket H = Hoop** AB = Adapter bracket
	2	10 = 100W 15 = 150W						
	3	10 = 100W 15 = 150W 20 = 200W						

*=LFL-1 & 2 Only
** = LFL-3 Only

Please note that the stock versions of the LFL naming convention differs

LFL Series

Explosion Proof LED Flood Light

FME Lighting | ILLUMINATING INDUSTRIAL APPLICATIONS

OPTICS

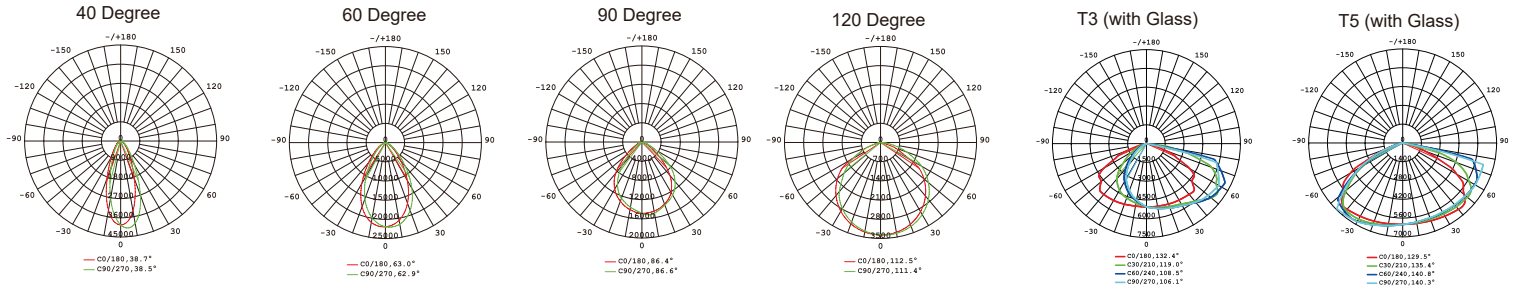

Model	Wattage	Operating Voltage	Total Lumens (lm)	Efficacy (lm/W)	CRI	Dimming
LFL-1	200-250W	AC90-305V/100-305V/277-480V/180-528V 50/60Hz	24,000-35,000	120-140	>70	0-10V dimmable
LFL-2	100-150W	AC90-305V/100-305V/277-480V/180-528V 50/60Hz	1,200-21,000	120-140	>70	0-10V dimmable
LFL-3	100-150W	AC90-305V/100-305V/277-480V 50/60Hz	1,200-21,000	120-140	>70	0-10V dimmable

ACCESSORIES & MOUNTING KITS:

LFL-1 & 2

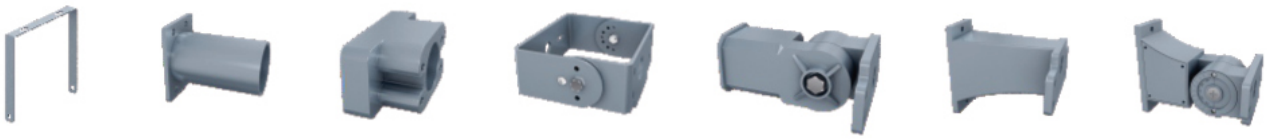

a b c d e f g

a. Trunnion mounting bracket (TM)
b. Light pole mounting bracket (B2)
c. Adapter bracket (AB)

d. Trunnion mounting kit (TM)
e. Slip fitter mounting kit (SF)
f. Arm mounting kit A (AMA)

g. Adjustable arm mounting kit B (AM-B)

LFL-3

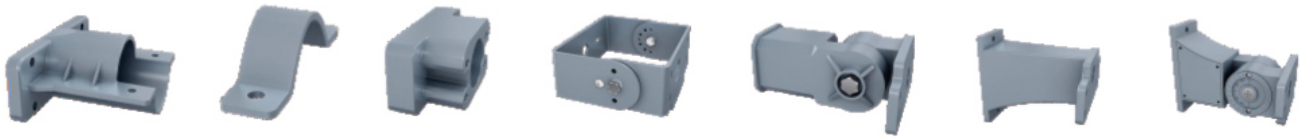

a b c d e f g

a. Light pole mounting bracket (B2)
b. Hoop (H)
c. Adapter bracket (AB)

d. Trunnion mounting kit (TM)
e. Slip fitter mounting kit (SF)
f. Arm mounting kit A (AMA)

g. Adjustable arm mounting kit B (AMB)

DIMENSIONS & PACKING:

LFL-1

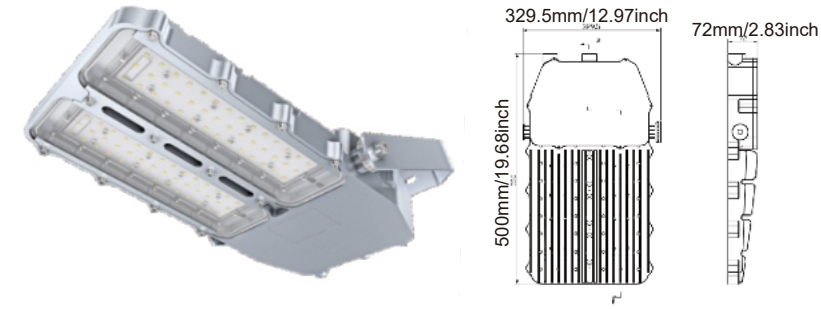

LFL-2

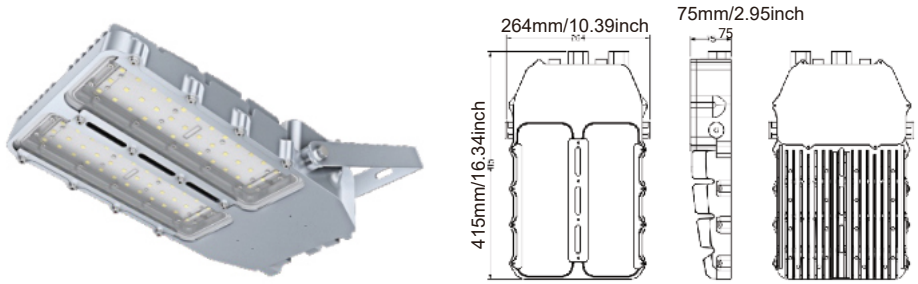

LFL-3

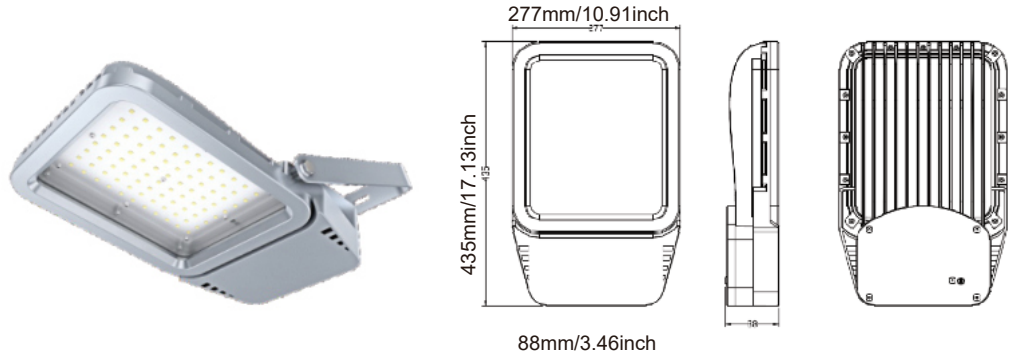

Model	Packing Size	Net Weight	Gross Weight
LFL-1	19.7x13x2.8 inch	9.5 kg / 20.94 lbs	10.5 kg/ 23.15 lbs
LFL-2	16.3x10.4x3 inch	6.5 kg / 14.33 lbs	7.5 kg/ 16.53 lbs
LFL-3	17.1x11x3.5 inch	7.3 kg / 16.09 lbs	8.3 kg/ 18.3 lbs

MOUNTING

Pole Mounting

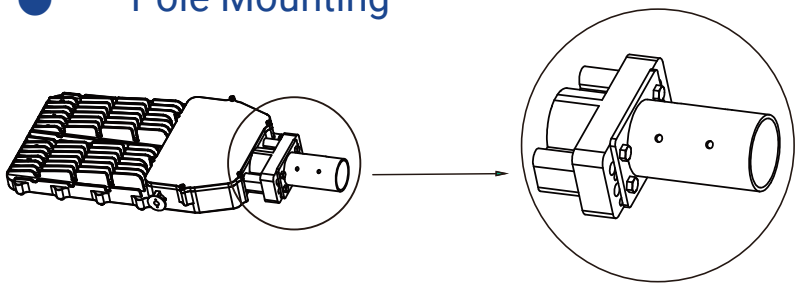

Adapter bracket &
Light pole mounting bracket

Accessories

Adapter bracket

Light pole
mounting bracket

Trunnion Mounting

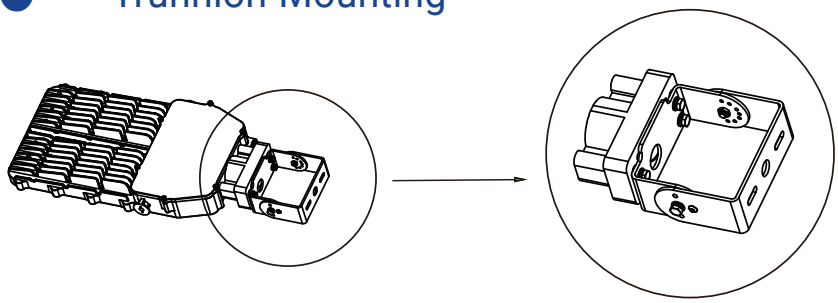

Adapter bracket &
Trunnion mountion kit

Accessories

Adapter bracket

Trunnion mounting kit

Arm Mounting (A)

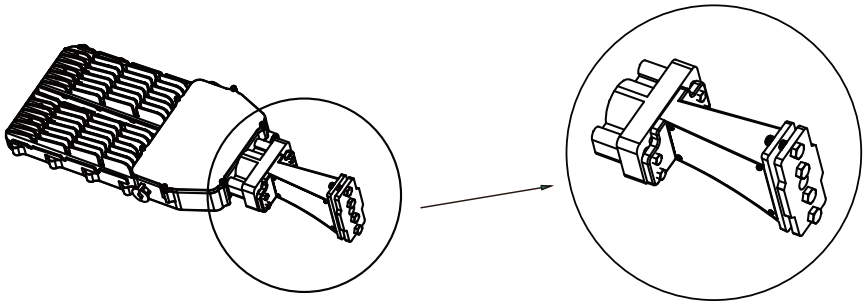

Adapter bracket &
Arm mounting kit A

Accessories

Adapter bracket

Arm mounting kit A

Arm Mounting (B)

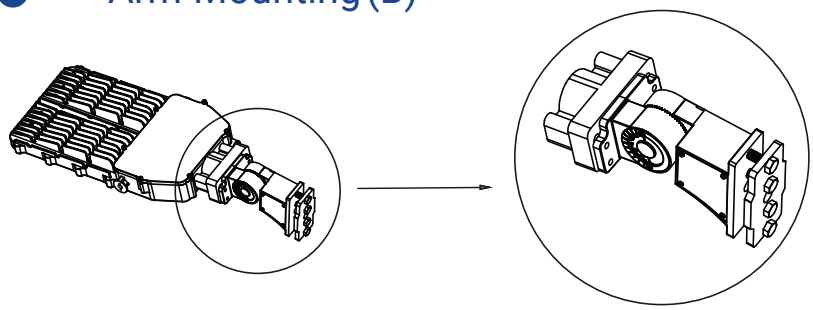

Adapter bracket &
Adjustable arm mountion kit B

Accessories

Adapter bracket

Adjustable arm
mounting kit B

Slip Fitter Mounting

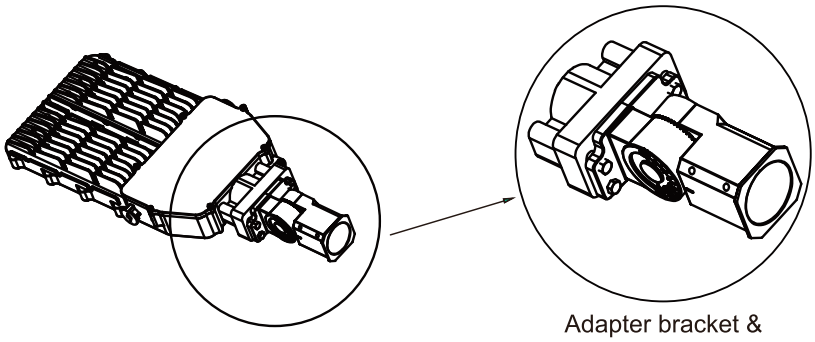

Adapter bracket &
Slip fitter mountion kit

Accessories

Adapter bracket

Slip fitter mountion kit

Bracket Mounting

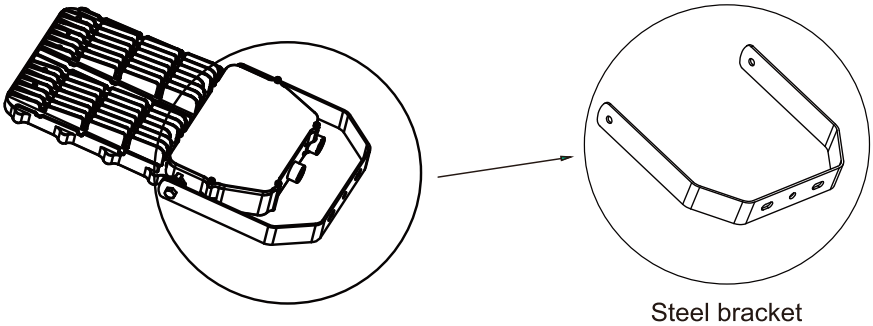

Steel bracket

Accessory

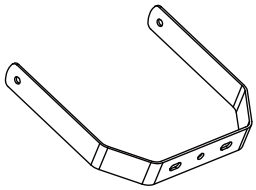

Steel bracket

Stanchion Mounting

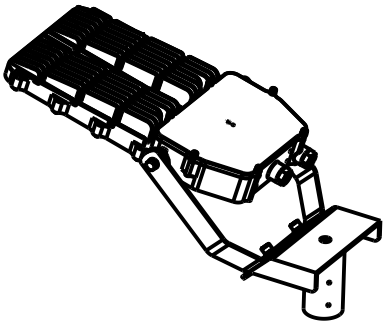

Accessory

Slip Fitter