ARCGAS Series

20” LED Recessed Gas Station Canopy

Project:	
Type:	
Catalog # :	

FME Lighting | 877 - 234 - 8460 | info@fmelighting.com

CERTIFIED UL 1598 UL 8750 LED SAFETY LISTED IP66 DesignLights Consortium™ Qualified Luminaires: CP20QF1X186|U HJ5KC**

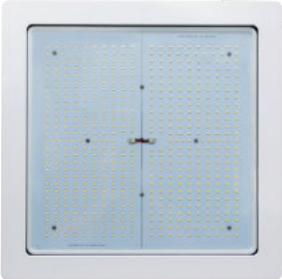

SPECIFICATIONS

Mounting
Recessed Mount (RM)

Housing
Die Cast Aluminum Housing with IP66 Driver Compartment.

Wattage
• Array: 185.9w; System: 206w; (400w HID Equivalent)

Lens
Tempered Clear Flat Glass Lens

Finish
White Powdercoat Finish Over a Chromate Conversion Coating. Custom Colors Available Upon Request.

Driver
Electronic Driver, 120-277V, 50/60Hz or 347-480V, 50/60Hz; Less Than 20% THD and PF>0.90. Standard Internal Surge Protection 6kV. 0-10V Dimming Standard for a Dimming Range of 100% to 10%; Dimming Source Current is 150 Microamps.

EasyLED LED
Aluminum Boards

Certifications & Warranty
CSA: Listed for Wet Locations, ANSI/UL 1598, 8750
IP66 Sealed LED Compartment.
5-Year Warranty for -40°C to +50°C Environment

KEY FEATURES

• Specialized mounting system tailored for typical canopy steel pan structures.
• Fixture housing designed to mimic legacy HID canopy lights, facilitating easy installation through a 4" minimum diameter cut hole in the canopy.
• Equipped with optical distribution optimized to replace HID lighting systems up to 400w MH or HPS, ensuring efficient illumination.
• Includes a galvanized steel back plate for installation over larger holes, enhancing versatility.
• IP66 rated powder coated die-cast mounting box above the canopy for secure driver and power connection.
• Offers flexibility in mounting heights, ranging from 12 to 20 feet, catering to diverse light level and uniformity requirements.

DIMENSIONS

Dimensions			
Width (D)	19⅞˝ (505mm)	Height 1 (A)	7¾˝ (195mm)
Length (B)	19⅞˝ (505mm)	Width (C)	4˝ (102mm)
		Height 2 (E)	1¼˝ (32mm)

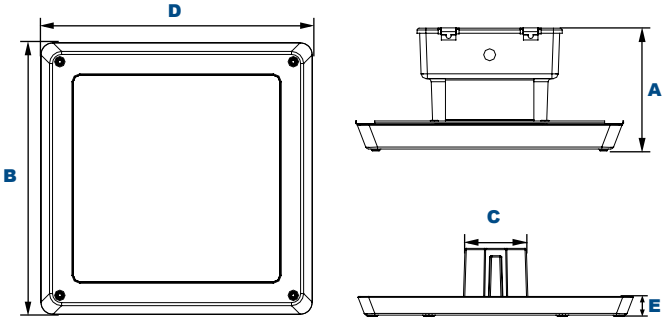

ORDERING INFORMATION

ORDERING GUIDE

Series	Wattage	CCT	Driver	Mounting	Color	Accessory
AGS	18 = 186W	C = 5000K	A = 120-277V B = 347-480V	RM = Recessed Mounting	W = White V = Custom (Contact Factory)	1F = Single Fuse* 2F = Double Fuse* SP = Surge Protection

**A Driver (120-277V) Models Only*

PHOTOMETRIC DATA

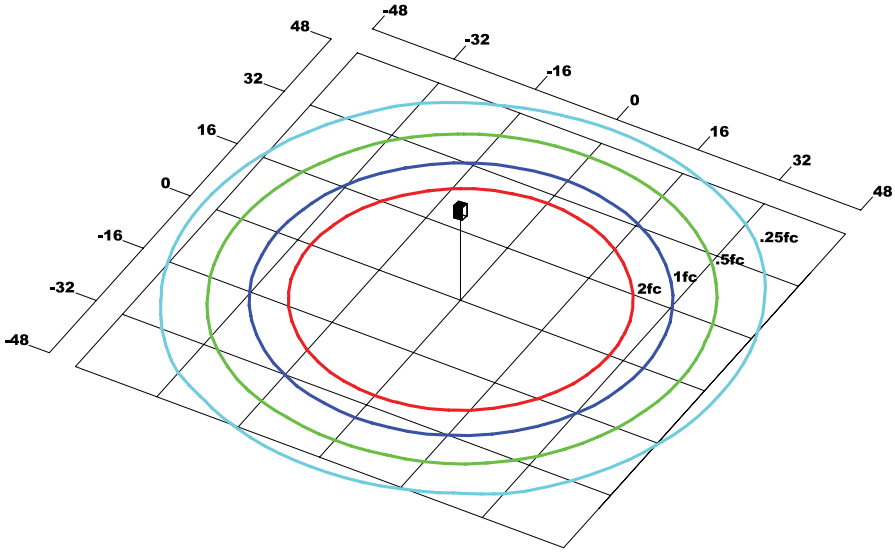

AGS Series
STANDARD
Grid in MH
MH=16 Feet

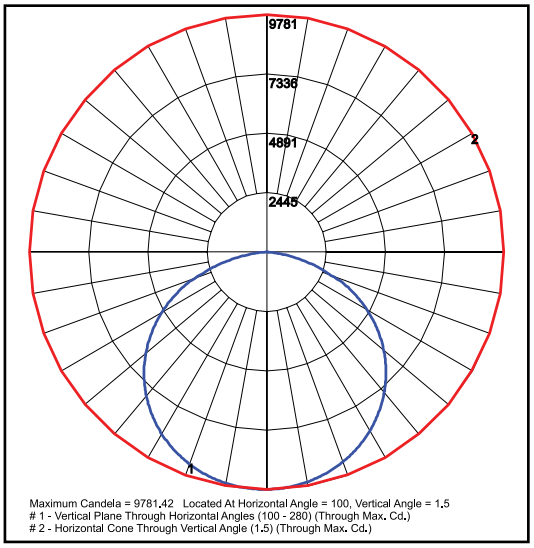

AGS Series
STANDARD

PHOTOMETRIC PERFORMANCE

				5000 CCT 80 CRI				
LED Board Watts	**Drive Current (mA)**	**Input Watts**	**Optics**	**Lumens**	**LPW**	**B**	**U**	**G**
186w	116	206	Type V	29,677	144	4	2	2

PROJECTED LUMEN MAINTENANCE

Data shown for 5000 CCT			Compare to MH			
TM-21-11	**Input Watts**	**Initial**	**25,000 Hrs**	**50,000 Hrs**	**100,000 Hrs**	**Calculated LED Life**
L70 Lumen Maintenance @ 25°C / 77°F	All wattages up to and including 206w	1.00	0.96	0.91	0.82	169,000
L70 Lumen Maintenance @ 50°C / 122°F		1.00	0.92	0.85	0.69	98,000
L80 Lumen Maintenance @ 40°C / 104°F		1.00	0.93	0.87	0.73	75,000

NOTES:
1. Projected per IESNA TM-21-11. Data references the extrapolated performance projections for the base model in a 25°C ambient, based on 10,000 hours of LED testing per IESNA LM-80-08.
2. Compare to MH box indicates suggested Light Loss Factor (LLF) to be used when comparing to Metal Halide (MH) systems.