PDM8 SERIES LED LINEAR HIGHBAY - PDM8 SERIES

Project:	
Type:	
Catalog #:	

Wattage & CCT selectable

90W	115W	155W	240W	4000K
105W	130W	180W	270W	5000K
130W	155W	210W	310W	

FEATURES

- The PDM8 Linear High Bay, is a super compact design using die-cast aluminum housing, utilizing a clean and integral structure.
- Standard 6kV surge protection. Please contact factory for additional surge protection.
- Delivers up to 150lm/W, with a maximum light output of 63,840lm.
- Bi-Level Microwave Sensor and remote controller are available.
- Internal or external emergency battery backup available. Please confirm with factory, additional charges may occur.
- Ideal for warehouse and storage applications, industrial facilities, and gymnasiums.

CONSTRUCTION

- **Housing:** Die-cast Aluminum.
- **Finish:** Corrosion resistant white powder coat.
  - Please contact for custom color options
- **Lens:** Impact resistant polycarbonate lens.
  - UGR <28 meets DLC premium.
- **Driver:** 0-10V dimmable driver, which can dim from 100% to off.
- **Voltage**:
  - 120-277V or 277-480V for US market.
  - 120-347V for Canada market.
- **CRI:** >80
- **Operating Temperature:** -40° F (-40° C) to 122° F (50° C)

Photometrics

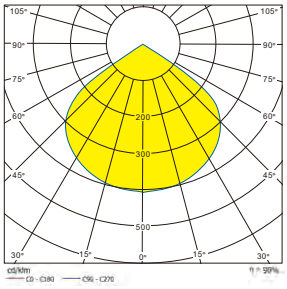

Standard 110°

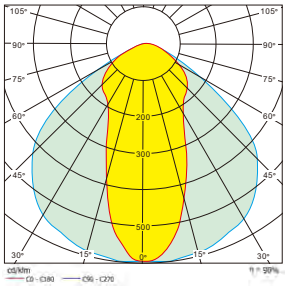

Aisle Optic

LISTING AND WARRANTY

- cUL listed, meets U.S. and Canada standards.
- DesignLights Consorium ®(DLC)Premium qualified.
- 5 year warranty.

ORDERING INFORMATION

MODEL	WATTAGE	CCT	VOLTAGE	MOUNTING	Options and Accessories
PDM8	**A** (90/105/130)W **B** (115/130/155)W **C** (155/180/210)W **D** (240/270/310)W **E** (310/360/420)W	**4** 4000K **5** 5000K **SIC**[2] Tunable	**LV** 120-277V **HV** 347-480V	**CH** Chain Suspension Kit **SM** Surface Mount Kit **P** Pendant	**AO** Aisle Optic **WG** Wire Guard **SB** Splice Bracket **BI-L** Bi-Level Sensor **RC** Remote Control **25WE** 25W Battery Backup **40WE** 40W Battery Backup

PDM8 SERIES LED LINEAR HIGHBAY - PDM8 SERIES

Size	Model	Wattage	Lumen (@50K) 120-277V / 120-347V	Lumen (@50K) 277-480V	CCT
Medium 1.2FT	PDM890W-XXKLV/HV-XY	90W	13500lm	13000lm	40k or 50k
	PDM8115W-XXKLV/HV-XYM	115W	17250lm	16750lm	
	PDM8130W-XXKLV/HV-XYM	130W	20020lm	19520lm	
	PDM8155W-XXKLV/HV-XYM	155W	23250lm	22750lm	
	PDM8180W-XXKLV/HV-XYM	180W	27000lm	26500lm	
	PDM8210W-XXKLV/HV-XYM	210W	31500lm	31000lm	
	PDM8(90/105/130)W-XXKLV/HV-XY	90W/105W/130W	Max. 20020lm	Max. 19520lm	
	PDM8(115/130/155)W-XXKLV/HV-XYM	115W/130W/155W	Max. 23250lm	Max. 22750lm	
	PDM8(155/180/210)W-XXKLV/HV-XYM	155W/180W/210W	Max. 31500lm	Max. 31000lm	
	PDM8(90/105/130)W-(40/50)KLV/HV-XY	90W/105W/130W	Max. 20020lm	Max. 19520lm	40k/50k selectable
	PDM8(115/130/155)W-(40/50)KLV/HV-XYM	115W/130W/155W	Max. 23250lm	Max. 22750lm	
	PDM8(155/180/210)W-(40/50)KLV/HV-XYM	155W/180W/210W	Max. 31500lm	Max. 31000lm	
Large 1.7FT	PDM8240W-XXKLV/HV-XYL	240W	36000lm	35500lm	40k or 50k
	PDM8270W-XXKLV/HV-XYL	270W	40500lm	40000lm	
	PDM8310W-XXKLV/HV-XYL	310W	46500lm	46000lm	
	PDM8(240/270/310)W-XXKLV/HV-XYL	240W/270W/310W	Max. 46500lm	Max. 46000lm	
	PDM8(240/270/310)W-(40/50)KLV/HV-XYL	240W/270W/310W	Max. 46500lm	Max. 46000lm	40k/50k selectable
Medium (combined) 2.4FT	PDM8360W-XXKLV/HV-XYM	360W	54000lm	53500lm	40k or 50k
	PDM8420W-XXKLV/HV-XYM	420W	63000lm	62500lm	
	PDM8(310/360/420)W-XXKLV/HV-XYM	310W/360W/420W	Max. 63840lm	Max. 62500lm	
	PDM8(310/360/420)W-(40/50)KLV/HV-XYM	310W/360W/420W	Max. 63840lm	Max. 62500lm	40k/50k selectable

Wattage/Current (A)	Voltage (V)					
	120V	208V	240V	277V	347V	480V
90W	0.75	0.43	0.38	0.32	0.26	0.19
115W	0.96	0.55	0.48	0.42	0.33	0.24
130W	1.08	0.63	0.54	0.47	0.37	0.27
155W	1.29	0.75	0.65	0.56	0.45	0.32
180W	1.50	0.87	0.75	0.65	0.52	0.38
210W	1.75	1.01	0.88	0.76	0.61	0.44
240W	2.00	1.15	1.00	0.87	0.69	0.50
270W	2.25	1.30	1.13	0.97	0.78	0.56
310W	2.58	1.49	1.29	1.12	0.89	0.65
360W	3.00	1.73	1.50	1.30	1.04	0.75
420W	3.50	2.02	1.75	1.52	1.21	0.88

PDM8 SERIES LED LINEAR HIGHBAY - PDM8 SERIES

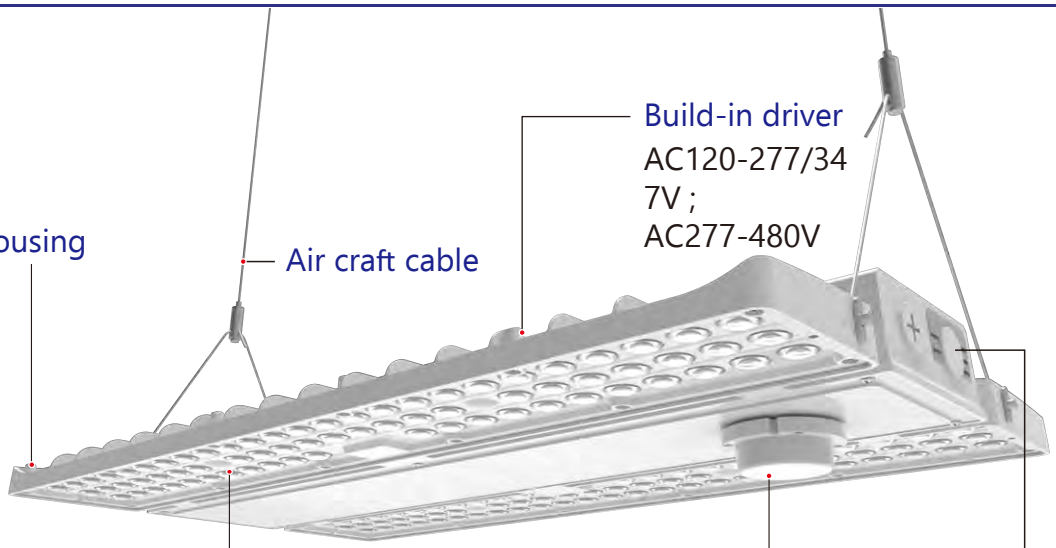

90W	115W	155W	240W	4000K
105W	130W	180W	270W	5000K
130W	155W	210W	310W	

Installation Types

Chain suspending mount kit

Surface mount kit

Pendant & surface installation box

Accessories

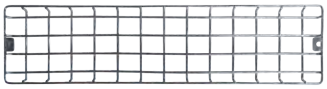

Wire guard

Motion sensor

Remote controller

Splice bracket

25W Emergency Driver
(apply to 90-210w PDM8 linear high bay light available only at 120-277/347v)

40W Emergency Driver
(apply to 240-310w PDM8 linear high bay light available only at 120-277/347v)

Dimensions & Weight

Normal

90-210W(1.2ft)

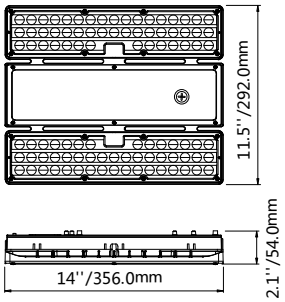

Net Weight: 5.5Lbs/2.5kgs

With Sensor

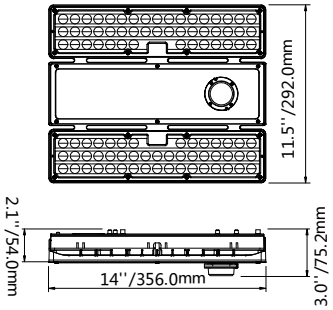

Net Weight:5.5Lbs/ 2.5kgs

With Emergency Driver

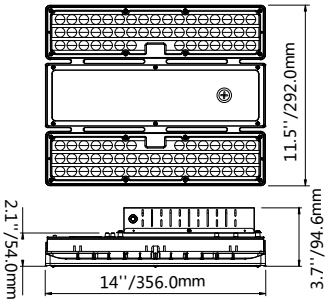

Net Weight: 7.9Lbs/3.6kgs

240-310W(1.7ft)

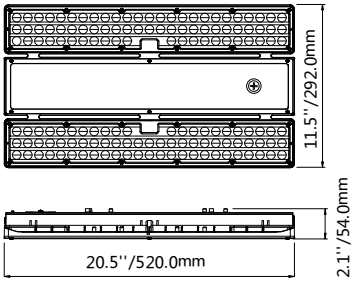

Net Weight: 7.3Lbs/3.3kgs

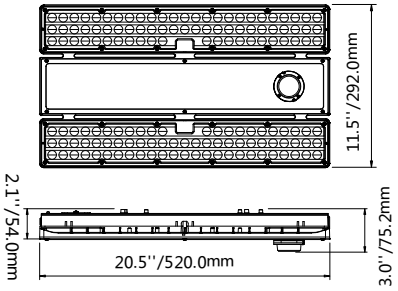

Net Weight:7.3Lbs/ 3.3kgs

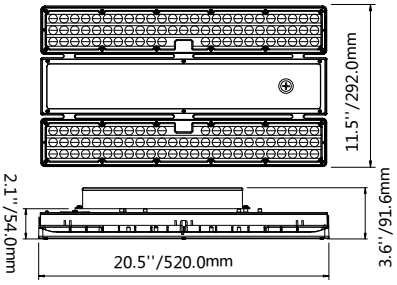

Net Weight: 10.1Lbs/4.6kgs

310-420W(2.4ft)

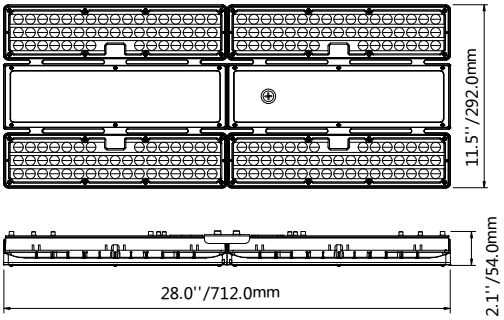

Net Weight: 11.5Lbs/ 5.2kgs

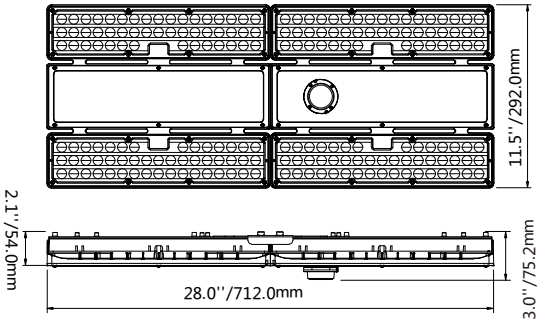

Net Weight: 11.5Lbs/ 5.2kgs