MGO-8 SERIES

WATTAGE AND CCT TUNABLE UFO HIGH BAY

Project:	
Type:	
Catalog #:	

FEATURES

- Sealed die-casting profile for indoor and outdoor applictions.
- 0-10V dimming standard for a dimming range of 100% to 10%.
- Scalable Lumen Packages from 6,000 to 32,000 Lumens replaces to 400W and Higher watt fixture.
- Efficacy up to 156 lumens per watt.
- Increase energy savings with optional sensors.
- Optional emergency function for emergency needs.
- Switchable color temperature (3000K/4000K/5000Kadjustable or 4000K/5000Kadjustable).
- Adjustable lumen output with four lumen settings (100%, 80%, 60%, 40%).
- Hook mount, pendant mount and surface mount available.
- Operating temperature is -40°C to 50°C(-40°F to 122°F).

  Note: Operating with emergency battery temperature range: 5°C to 45°C (+45°F- +113°F).

APPLICATIONS

Suitable for commercial, retail and institutional applications including gymnasiums, factories and warehouses.

CCT&Power regulator

Offer four selectable lumen output (40%/60%/80%/100%), Offer three selectable CCTs (30K/40K/50K) or two selectable CCTs (40K/50K).

CCT FIELD-ADJUSTABLE

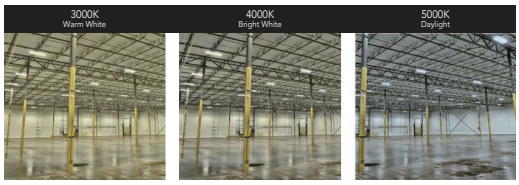

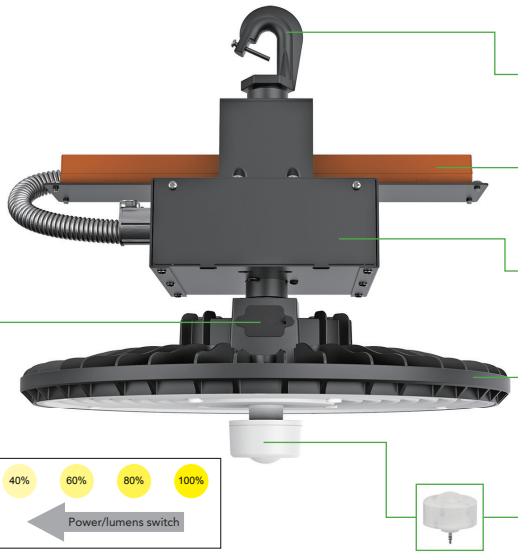

Installation accessery

Available for both hook mounting and surface mounting with U-bracket(optional). U-bracket allows to adjust the direction to illuminate any area you need.

Emergency Battery

25W 3500lm 90min

Transformer BOX

Transformer can be easily added into the Junction-box and convert to HV models, reducing SKUs and inventory pressure.

Housing

Rugged die-cast housing with corrosion-resistant powder coating for effective protection.

External sensor（optional）

PIR sensor allows for security and energy saving.

PERFORMANCE DATA

SYSTEM WATTS	VOLTAGE	PHOTOMETRY	LUMENS 3000K(70CRI)	LPW 3000K(70CRI)	LUMENS 4000K(70CRI)	LPW 4000K(70CRI)	LUMENS 5000K(70CRI)	LPW 5000K(70CRI)
100W	120-277VAC	High Bay	14000lm	140 lm/W	15000lm	150 lm/W	14200lm	142 lm/W
160W	120-277VAC	High Bay	23000lm	144 lm/W	25000lm	156 lm/W	24000lm	150 lm/W
210W	120-277VAC	High Bay	30000lm	143 lm/W	32000lm	152 lm/W	30500lm	145 lm/W

ADJUSTABLE LUMEN OUTPUT TABLE

SETTING	CCT	100 W		160 W		210 W	
		SYSTEM WATTS	LUMENS (70 CRI)	SYSTEM WATTS	LUMENS (70 CRI)	SYSTEM WATTS	LUMENS (70 CRI)
100 %	5000 K	100 W	14200 lm	160 W	24000 lm	210 W	30000 lm
80 %	5000 K	80 W	11500 lm	128 W	20000 lm	168 W	24500 lm
60 %	5000 K	60 W	8800 lm	95 W	15000 lm	125 W	18600 lm
40 %	5000 K	40 W	6000 lm	65 W	10500 lm	85 W	13000 lm

DIMENSION

unit: mm/inch

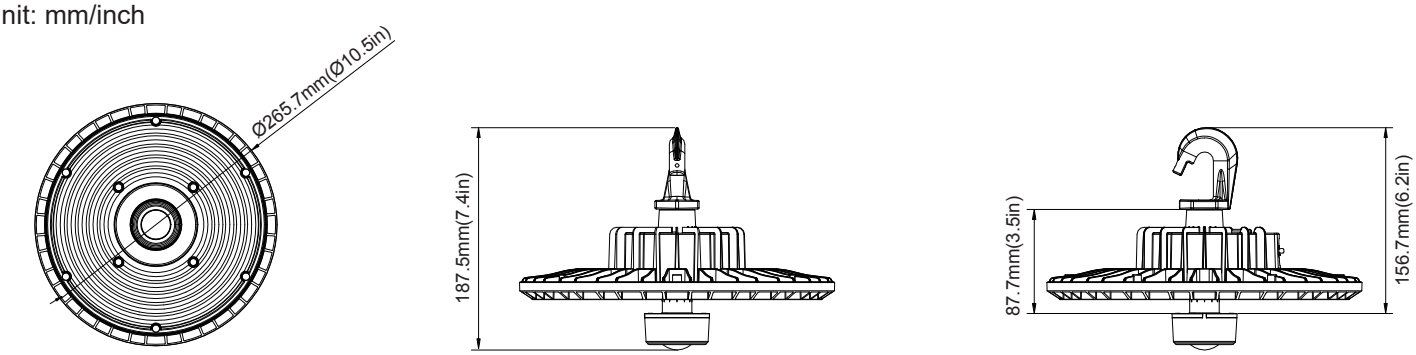

100W

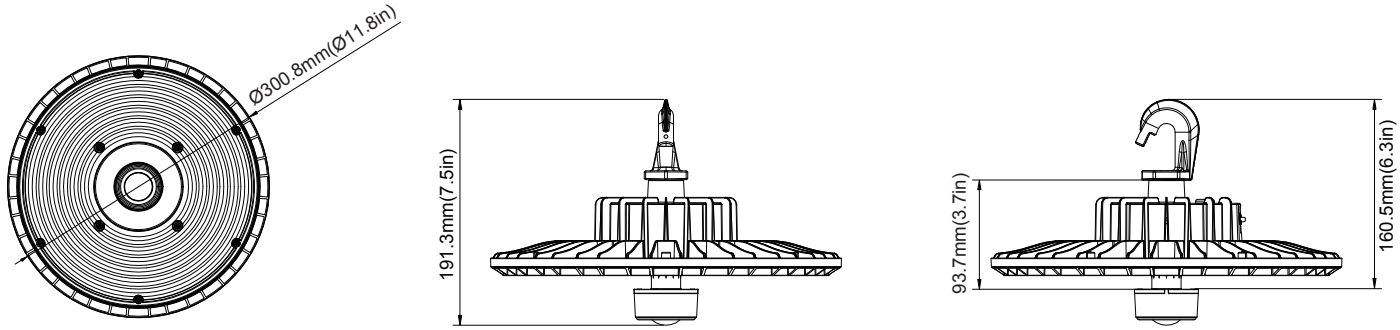

160W

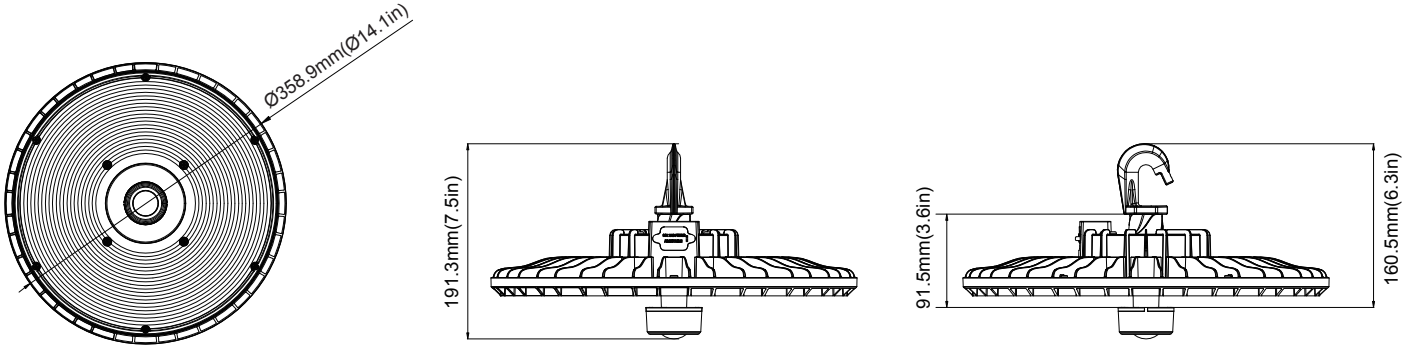

210W

ACCESSORIES

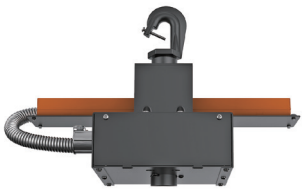		
Emergency Battery 25W 3500lm 90min	External PIR sensor （ANT-6-4T）	U-Bracket Use for surface mount

PHOTOMETRICS

General

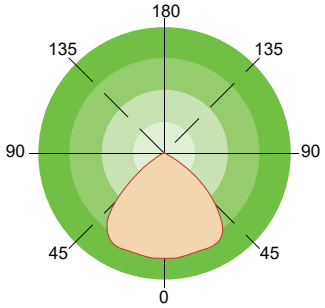

ORDERING GUIDE

MODEL	WATTAGE	VOLTAGE	CCT	HOUSING COLOR	OPTIONS
MGO-8 Tunable High Bay Series	**TW** 85W 125W 168W 210W	**LV** 120-277V	**TC** 4000K 5000K	**B** Black **Z** Dark Bronze **W** White	**PS** PIR Sensor **EM** Emergency Battery **UB** U-Bracket Mounting