| | |
|---|---|
| Project: | |
| Type: | |
| Catalog #: | |

# Hazardous Location LED Luminaire

## FME MOON Series

Standard Trunnion
&
Pendant Mounting

## Product description

The MOON Series LED Luminaire can be used locations made hazardous by the presence of flammable vapors, gases, or combustible dusts as defined by the NEC, Atex, CNEX, and CSA. The ambient temperature rating of 60°C (145°F). The product is marine rated and IP66 rated. Available with emergency battery backup. Trunion bracket included.

## Features

-High efficacy: up to 140lm/W
-CRI>70
-**Standard with Trunnion U bracket**
-Wide and narrow optics for uniform illumination
-**Available with battery backup**
-High vibration resistance
-Copper free aluminum
-Stainless steel hardware
-Stainless steel trunion bracket included
-Comes standard with a 3 ft cord
-IP66
-10KV surge protected
-Operating temperature:

20 - 80W : -40°C - 50°C (-40°F - 122°F)
100 - 200W : -40°C - 40°C (-40°F - 104°F)

## Explosion Protection

| | |
|---|---|
| Marking Atex | II2 G Ex db IIB T6 Gb<br>IID Ex db IIIC T80 Gb IP66 |
| Marking IECEX | Ex db IIB T6 Gb<br>Ex db IIIC T80 Gb IP66 |
| Marking UL844<br>(North American) | Class I,Division 2,Group A,B,C,D<br>Class II,Division 1,Group E,F,G<br>Class II,Division 2,Group E,F,G<br>Class III |
| Marine Marking | UL 1598A<br>ABS Type Approved |
| Other Rating | IP 66<br>IK 10 |

## Application

-Power Plants / Heavy Industrials
-Paper mills
-Wastewater Treatment Plants
-Food and Beverage Industry
-Chemical Processing Facility
-Oil and Gas
-Ocean Marine
-Tunnels
-LNG Facilities

## Warranty

5-Year Standard Warranty

## Ceiling Mounted Bracket

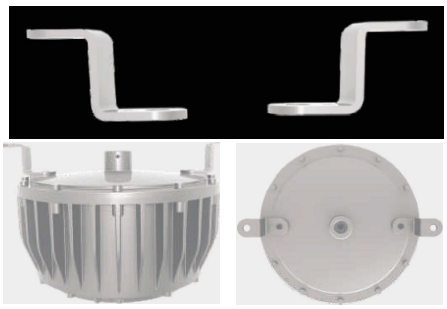

Side View Top View

****Ceiling mounted bracket comes standard with the Moon, Star, Venus, Space and Mars Series.******

## Explosion Proof Junction Box

**** EX-JBOX can be used with the Moon, Star, Venus, Space and Mars Series.****

## 25° Wall Mount

****25 wall mount can be used with the Moon, Star, Venus, Space and Mars Series.****

## 90° Wall Mount

****90 wall mount can be used with the Moon, Star, Venus, Space and Mars Series.****

## 25° Stanchion

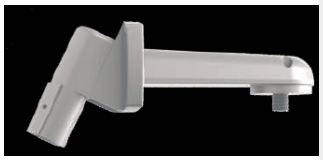

## 90° Stanchion

****Stanchion mount can be used with the Moon, Star, Venus, Space and Mars Series.****

## Conduit 47(in)

# Ordering Information and Mounting Accessories

| FME-MOO | – | 4 | – | 52 | – | B | – | C | – | XX | – | XX | – | XX |
|---|---|---|---|---|---|---|---|---|---|---|---|---|---|---|
| Series | | Wattage | | Hazloc | | Voltage | | Color Temp | | Optic | | Dim/Non-Dim | | Option |

**SERIES**
FME-MOO

**WATTAGE**
2=20W
4=40W
6=60W
8=80W
10=100W
12=120W
15=150W
20= 200W

**HAZLOC**
52=listed ratings

**VOLTAGE**
A=AC100-277V
B=AC277-480V

**COLOR TEMP**
S= 4000K
I= 5000K
C= 6000K

**OPTIC**
M=40⁰
N= 60⁰
O= 90⁰
P= 100⁰
Q= 110⁰
R= 120⁰

**DIM/NON-DIM**
D=Dimmable
ND=Non-Dimmable

**OPTION**
OPDPS=25⁰ Stanchion
OPPS=Stanchion
OPWA=Wall Arm Mount
OPCB=Ceiling Mount
OPPP=Pendant Mount
OPDPP=12⁰ Pendant
OPEB=Junction Box
DREF = Dome Reflector
AREF = Angle Reflector
WG = Wire Guard
FG = Frosted Globe
*GG = Globe & Guard
EM = Emergency Battery Back up

* GG = 180⁰ Optic

# Stock Items

| |
|---|
| FME-MOO-4-52-A-I-R-ND |
| FME2*-MOO-6-52-A-I-R-ND |
| FME-MOO-6-52-A-I-R-ND |
| FME-MOO-8-52-A-I-R-ND |
| FME-MOO-10-52-A-I-R-ND |
| FME-MOO-15-52-A-I-R-ND |
| FME-MOO-20-52-A-I-R-ND |

*Use 20-40W dimensions

# Photometric

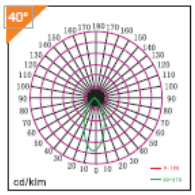

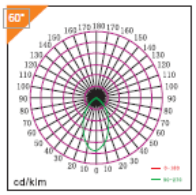

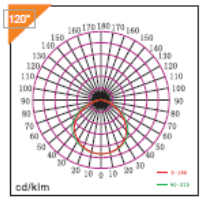

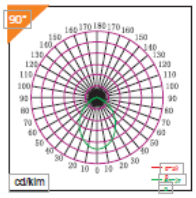

# Technical Parameter

| Item No. | FME-MOO-2 | FME-MOO-4 | FME-MOO-6 | FME-MOO-8 | FME-MOO-10 | FME-MOO-12 | FME-MOO-15 | FME-MOO-20 |
|---|---|---|---|---|---|---|---|---|
| Power | 20W | 40W | 60W | 80W | 100W | 120W | 150W | 200W |
| Input Voltage | 120-277V OR 347-480V | | | | | | | |
| Lumen | 2,600 | 5,200 | 7,800 | 10,400 | 13,000 | 15,600 | 19,500 | 26,000 |
| Light Efficency | 140lm/W | | | | | | | |
| CCT | 4000K / 5000K | | | | | | | |
| CRI | >70 | | | | | | | |
| IP | IP66 | | | | | | | |
| Certification | ETL listed, UL844, UL 1598, UL 1598A, CSA standard, ABS, ATEX, IECEx certified, IP 66 | | | | | | | |

# Mechanical Structure

Unit: mm or inch

## 20 Watt & 40 Watt Version

### Standard Bracket and Flat Glass Lens

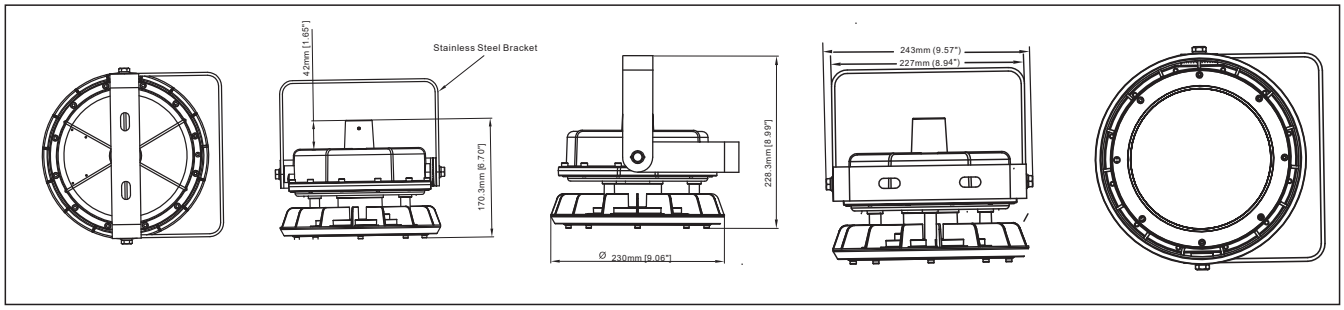


### Standard Bracket and Wireguard

1.Bracket, Glass Lens, Wireguard and flat LED module.

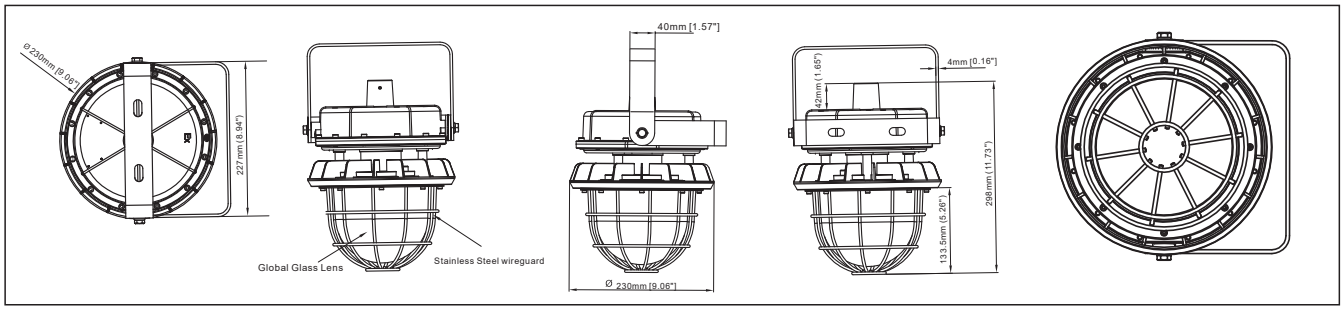


This structure type with bracket, global glass lens and wireguard to generate 180° light distribution.

### 30° Angle Dome Reflector

1, Bracket, Global Glass Lens, flat LED module and 30° cut off angle reflector.

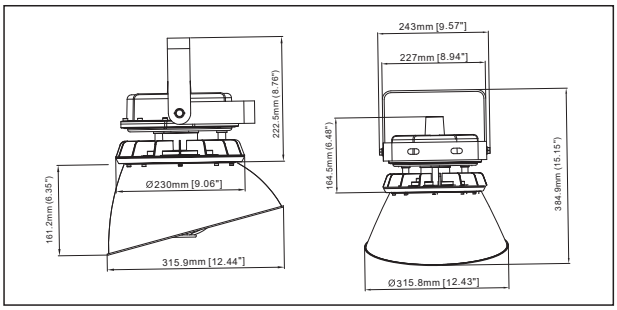


This structure can make the lighting distribution more concentrated for special beam angle.

### Dome Reflector

1, Bracket, Global Glass Lens, flat LED module and dome reflector

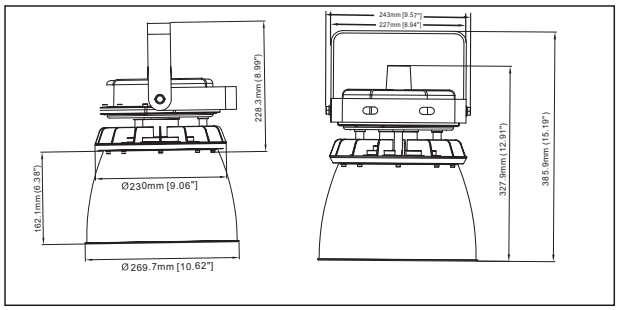


This structure can make the lighting distribution more concentrated.

## 60 Watt & 80W Version

### Standard Bracket and Flat Glass Lens

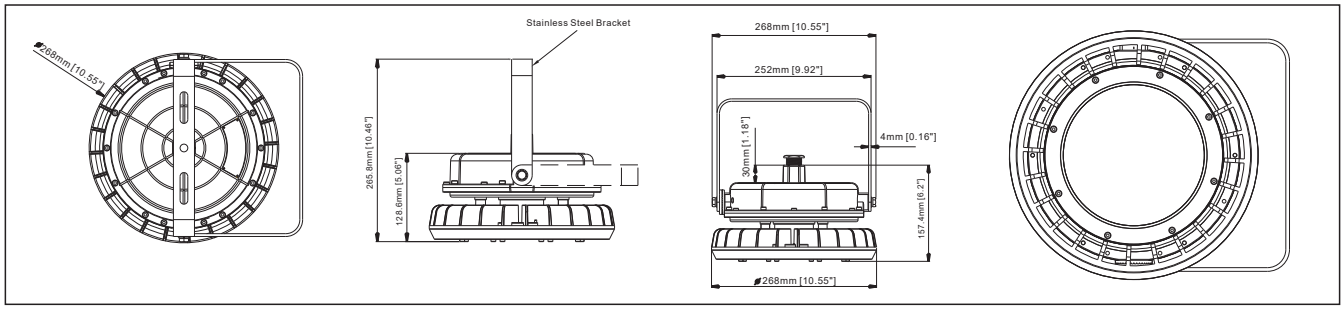


This structure type with bracket,flat glass and optics lens to generate 40°,60°,90° and 120° light distribution.

### Standard Bracket and Wireguard

1, Bracket, Global Glass Lens, Wireguard and flat LED module.

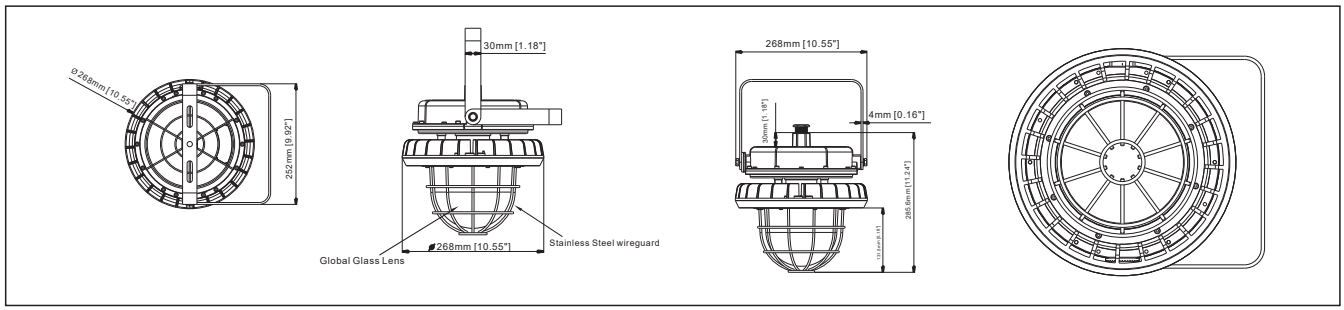


### 30° Angle Dome Reflector

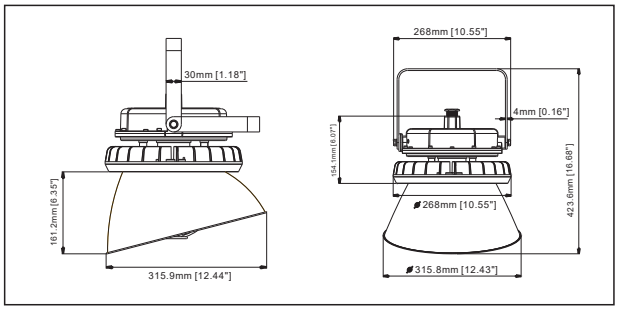


This structure can make the lighting distribution more concentrated for special beam angle.

### Dome Reflector

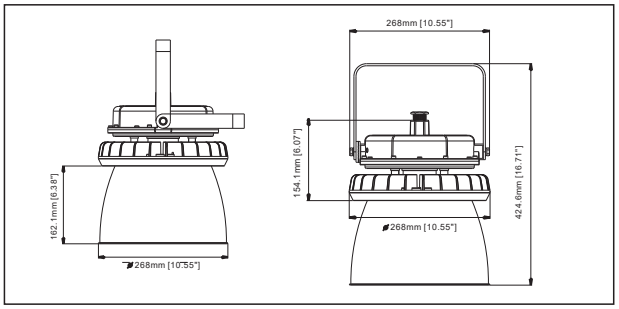


This structure can make the lighting distribution more concentrated.

## 100 Watt - 200 Watt Versions

### Standard Bracket and Flat Glass Lens

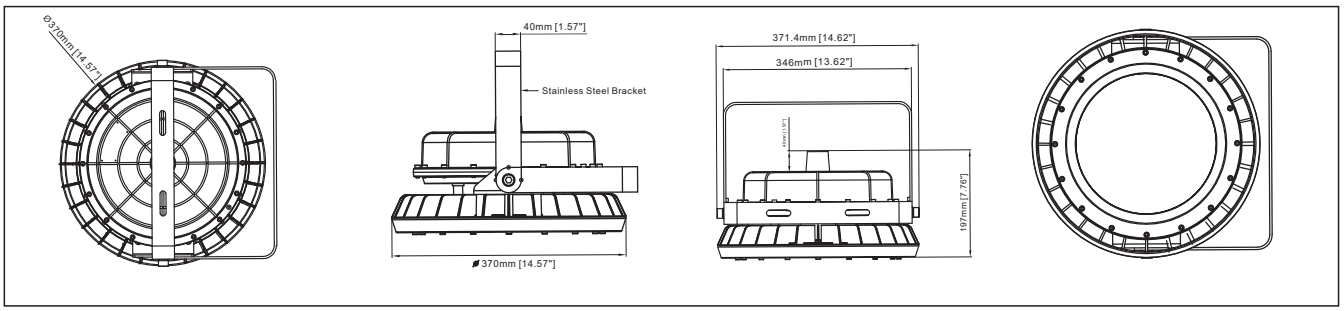


This structure type with bracket,flat glass and optics lens to generate 40°,60°,90° and 120° light distribution.

## Standard Bracket and Wireguard

1, Bracket, Global  Glass Lens, Wireguard and flat LED module.

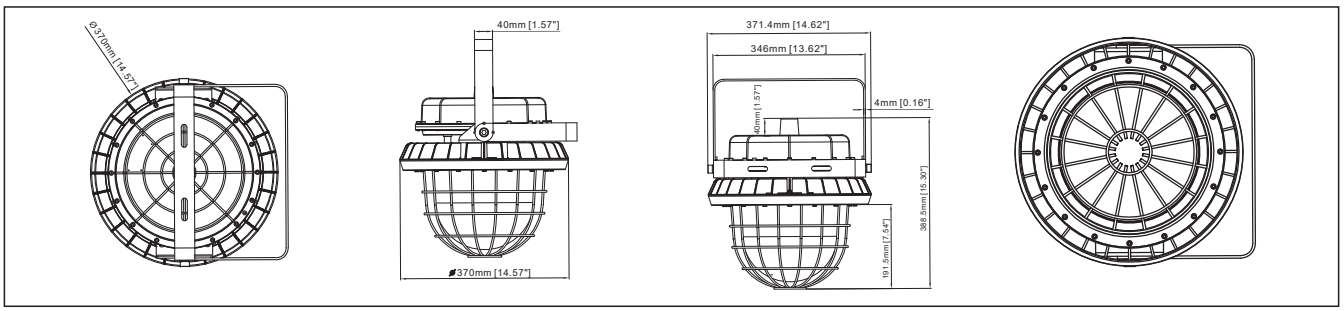


This structure type with bracket, global glass lens and wireguard to generate 180° light distribution. We also can put corn bulb In the global glass lens to make this beam angle up to 360°.

## 30° Angle Dome Reflector

1, Bracket, Global  Glass Lens, flat LED module and 30° cut off angle reflector.

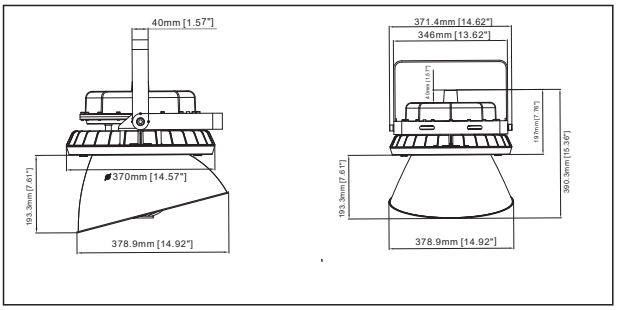


This structure can make the lighting distribution more concentrated for special beam angle.

## Dome Reflector

1, Bracket, Global  Glass Lens, flat LED module and dome reflector

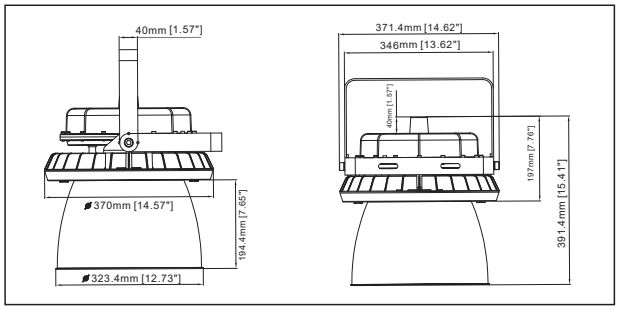


This structure can make the lighting distribution more concentrated.

# Lighting Distribution

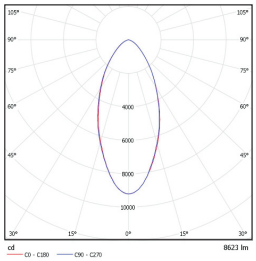


Meanning Beam Angle: 60°
Test Model: EX-80W BN50D60
Flat Glass Lens

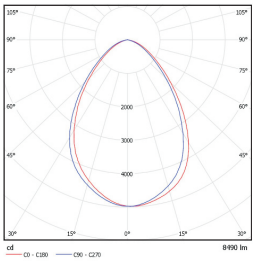


Meanning Beam Angle: 90°
Test Model: EX-80W BN50D90
Flat Glass Lens

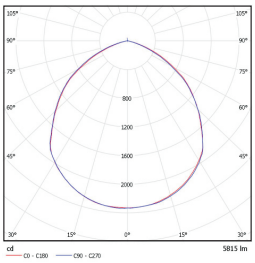


Meanning Beam Angle: 120°
Test Model: EX-40W B2N50D120
Flat Glass Lens

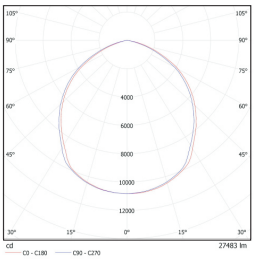


Meanning Beam Angle: 120°
Test Model: EX-200W B3N50D120
Flat Glass Lens

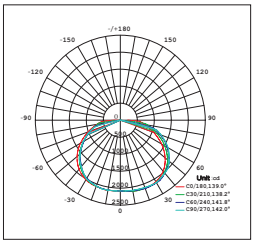

Meaning Beam Angle: 140. 2°
Test Model: EX-80W BN50D120
Global Glass  Lens with wireguard

# Ceiling Mounting

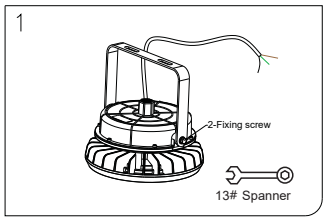


1. Take the fixture and accessory out from cartoon box, tighten 2x angle holder screw as Fig.1.

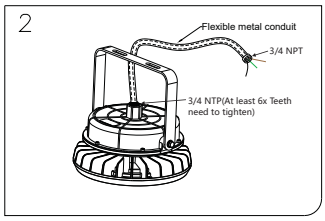


2. Flexible metal conduit install and tighten with the fixture.

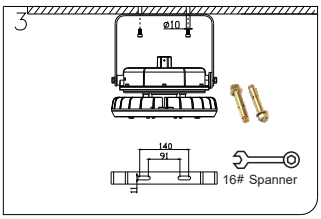


3. Drill 2x hole as Fig.2, the distance can be 91~140mm, fixing ∅10 expanded crews and bracket on ceiling.

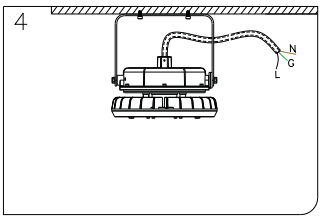


4. Connect the AC cable, Black cable conect to L, white cable connect to N, green cable connect to grounding.

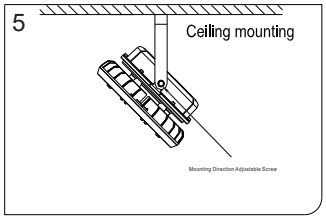


5. Adjust the beam angle from 0-180°.

# Wall Mounting

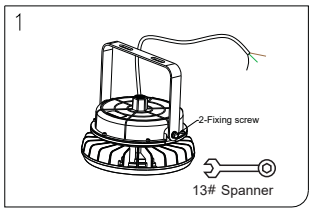


1. Take the fixture and accessory out from cartoon box, tighten 2x angle holder screw as Fig.1.

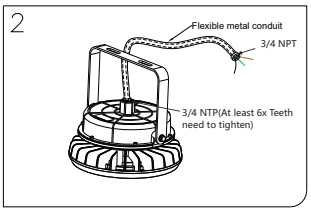


2. Flexible metal conduit install and tighten with the fixture.

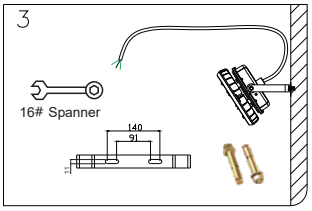


3. Drill 2x hole as Fig.2, the distance can be 91~140mm, fixing ∅10 expansion screws and bracket on ceiling.

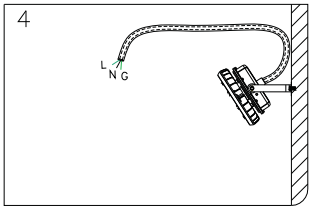


4. Connect the AC cable, Black cable conect to L, white cable connect to N, green cable connect to grounding.

# Pole Pendant

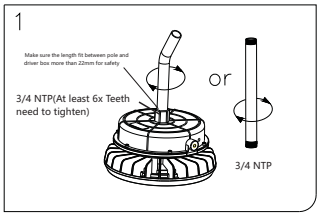


1. Take the fixture and pole accessory out from cartoon box, tighten pole as Fig.1.

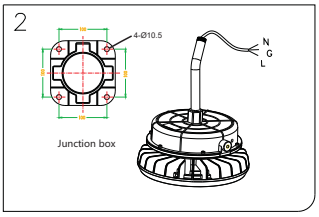


2. Connect the AC cable to junction box, black cable connect to L, white cable connect to N, green cable connect to grounding.

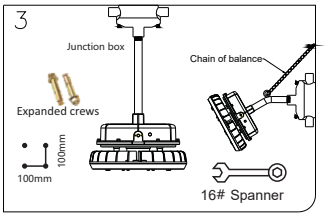


3. Drill 4x Ø10mm holes, as 100mm distance, install the junction box to the wall or ceiling as Fig.3, tighten the pole to the box, and adjust the chain of balance.

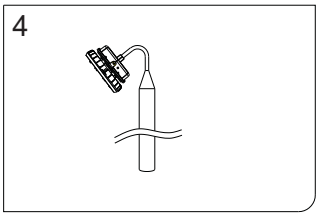


Optional: Install the fixture to the long pole after cable connecting.

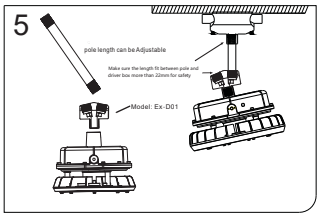


1. Adjustable pole installation. With this adjustable kit, you can Make any light distribution direct as you want.

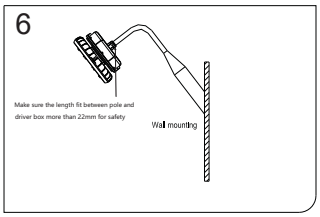


Optional: Install the fixture to the long pole and mount to the wall.

# Hook Pendant

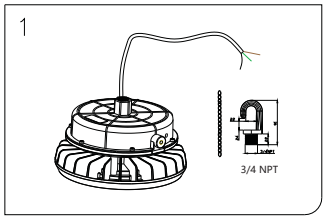


1. Take the fixture and accessory out from cartoon box, tighten 2x angle holder screw as Fig.1.

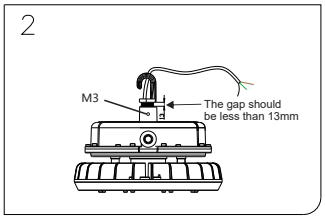


2. Tighten the hook with the fixture, at least 6x teeth need to tighten, fix the M3 screw to avoid the hook loosing .

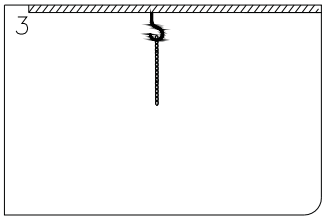


3. Drill 1 expansion screw hole and install it, and hang the chain as Fig.3.

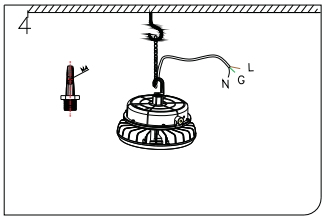


4. Hang the fixture to the hook as above, connect the AC cable, Black cable connect to L, white cable connect to N, green cable connect to grounding.

# Quick Arm Mounting without open driver box

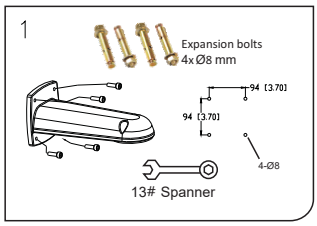


1. Drill 4x holes as above distance, and fix the arm on the wall, tighten 4x screwes as Fig.1.

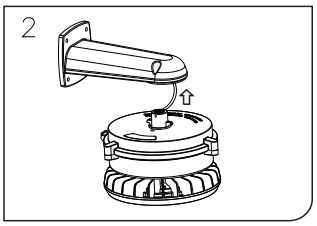


2. Contact the power AC wire with lamp, put the terminal into the arm.

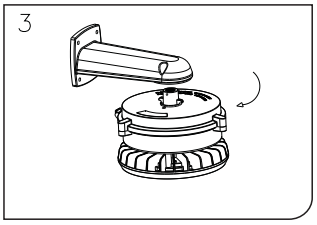


3. Match the circle part with arm, and rotate it to right.

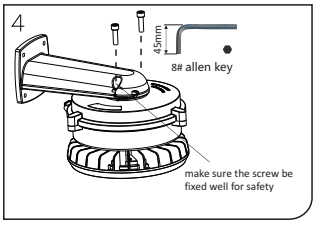


4. Tighten 2x screws to avoid the lamp loosed.

# Arm or Ceiling Mounting by openning driver box

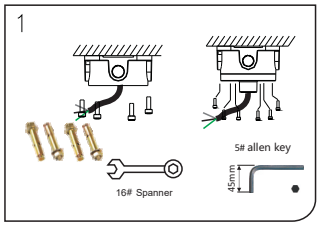


1 . Install the junction box to ceiling the via 4x expansion bolts, tighten the junction box cover screws by 5# allen key.

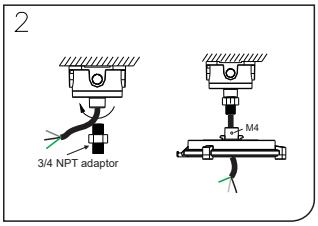


2. Through the cable to the hole of adaptor, install the 3/4" NPT adaptor and tighten it. Tighten the driver enclosure cover to adaptor. Finally, tighten M4 screw to avoid loosing.

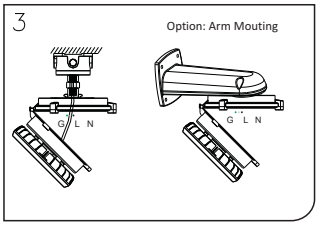


3. Hang the lamp housing to the driver enclosure cover, contact the AC wire as black one to live wire, white one to null wire, green one to grounding.

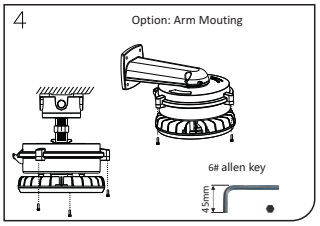


4. Tighten 3x M8 screws for driver enclosure as above.

FME Lighting | ILLUMINATING INDUSTRIAL APPLICATIONS
Tel: (877) 234-8460 Email: info@fmelighting.com Web: www.fmelighting.com

# Stanchion Mounting

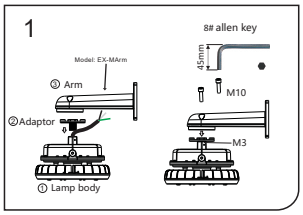


1. Tighten part 2 and assembly 1, and fix the M3 screw,install , arm to the adaptor, tighten the M10 via 8# allen key.

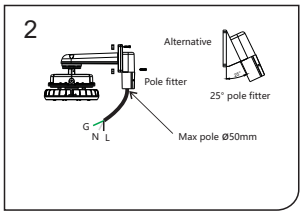


2. Install the pole fitter with arm via 4x M8 screws, the max suitable pole diameter 50mm, the alternative 25 degress pole fitter.

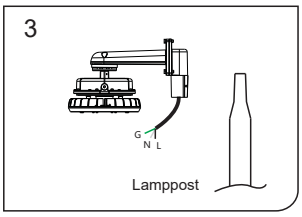


3. Contact the cable to AC wire, black one contact to live wire, white one contact to null wire, green one contact to grounding.

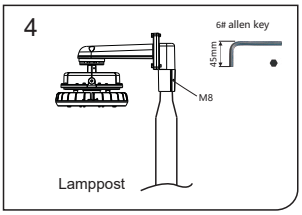


4. Slip the fitter to the lamppost and tighten M8 inner hexagonal screw.

# Wall Mounting to junction box

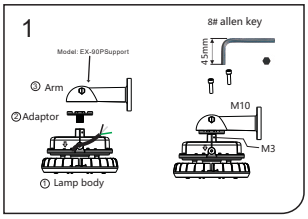


1. Tighten part 2 and assembly 1, and fix the M3 screw,install arm to the adaptor, tighten the M10 via 8# allen key.

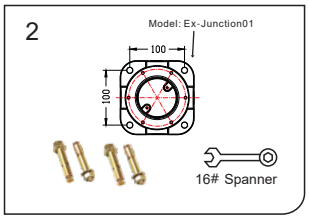


2. Drill 4x Ø10mm holes Install the junction box to the wall via M10 expanded screw.

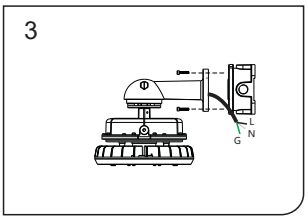


3. Contact the AC wire to power system, black one to Live wire, white one to Null wire, green one to grounding.

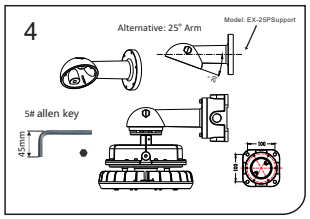


4. Tighten 6 x screws between arm and junction box, turn on the power to test the luminaires is work.

# Accessories

- Name: Junction Box
  Material: Aircraft Aluminum A383

- Name: Hook Mount
  Material: Aircraft Aluminum A383

- Name: Metal Conduit
  Material: Stainless Steel and Aluminum

- Name: 12 Degree Conduit Mount
  Material: Iron with Power Coating

- Name: Conduit
  Material: Iron with Power Coating

- Name: Pendant Adapter
  Material: Aircraft Aluminum A383

- Name:Wall Arm Mount
  Material: Aircraft Aluminum A383

- Name: 25 Degree Pole Support
  Material: Aircraft Aluminum A383

- Name: 90 Degree Pole Support
  Material: Aircraft Aluminum A383

- Name: Dome Reflector
  Material: Aluminum A6061

- Name: Angle Reflector
  Material: Aluminum A6061

- Name: Safety Chain
  Material: Stainless Steel S30400