FME TN1 SERIES

LINEAR LED FIXTURE

Project:	
Type:	
Catalog #:	

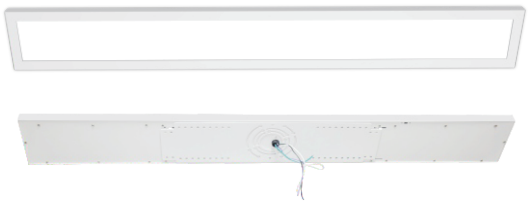

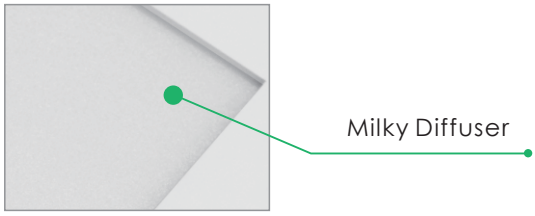

PRODUCT DESCRIPTION

FME's TN1 series LED linear fixtures with milky diffuser are an energy-efficient, low maintenance alternative to traditional linear fluorescent with built-in driver. It is available in 4"x4FT or 6"x4FT units, with a choice of color temperatures 3000k, 3500k, 4000k and 5000K. This luminaire can be surface mounted in the drywall ceiling or recessed in suspension ceiling, providing a flexible solution for new construction application or retrofit existing fixtures, widely used in office space, major retail stores, education, government, healthcare and hospitality, ect.

PERFORMANCE SUMMARY

Model	LS44-DM-XXX	LS46-DM-XXX
Diffuser	Milky	Milky
Size	4"x4FT	6"x4FT
Input Wattage	40 Watts	40 Watts
Input Voltage	100-277V AC	100-277V AC
Delivery Lumens@3500K	3400 lm	3760 lm
Efficacy@3500K	85 lm/w	94 lm/w
Color Rendering Index (CRI)	Ra>80	Ra>80
Power Factor	PF>0.90	PF>0.90
Dimming Style	1-10V Dimming	1-10V Dimming
CCT	3000K/3500K 4000K/5000K	3000K/3500K 4000K/5000K
Beam Angle	112°	112°
Mounting	Surface mounted &recessed	Surface mounted &recessed
Warranty	5 Years	5 Years

DIMENSIONS

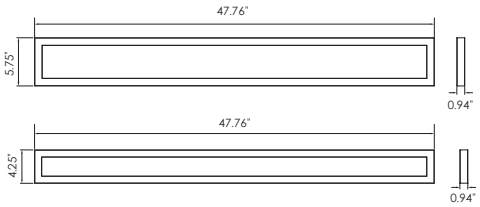

REGULATORY & VOLUNTARY QUALIFICATIONS

UL Listed	Pending
Damp rated	Yes

ORDER INFORMATION

HIGHLIGHTED ITEMS FACTORY STOCK

EXAMPLE: LS44-DM-35E

Product category	Size	Dimming	Diffuser(X)	CCT(XX)	CRI(X)
TN1	44=4"x4FT 46=6"x4FT	D= 1-10V Dimming	M=Milky P=Prismatic	30=3000k 35=3500k 40=4000k 50=5000k	E=80 CRI

FME TN1 SERIES

LINEAR LED FIXTURE

AVERAGE ILLUMINANCE CURVE

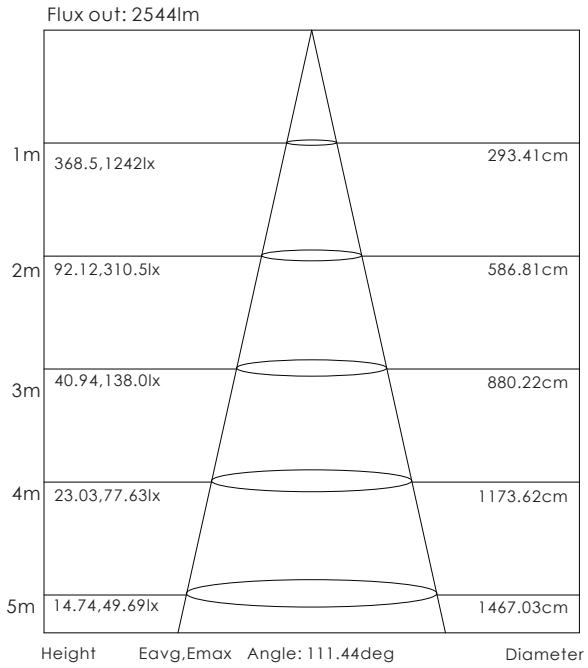

Note: The Curves indicate the illuminated area and the average illumination when the luminaire is at different distance.

PHOTOMETR Y

Fixture photometry has been conducted accredited testing laboratory in accordance with IESNA TN1-79-08. IESNA LM-79-08 specifies the entire luminaire as the source resulting in a fixture efficiency of 100%.Result may vary per actual order.

Luminous Intensity Distribution Diagram

TN1-44-DM-XXX

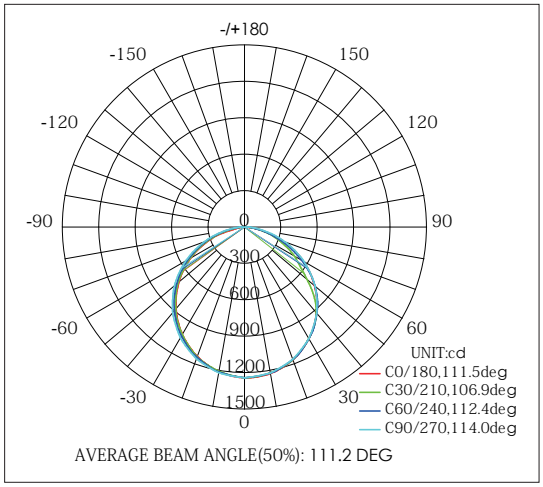

Zonal Flux Diagram

T	C0	C45	C90	C135	C180	C225	C270	C315
5	1240	1235	1232	1229	1232	1228	1231	1234
10	1226	1221	1222	1210	1210	1209	1220	1220
15	1201	1199	1192	1184	1178	1182	1189	1197
20	1165	1161	1161	1140	1135	1138	1158	1158
25	1118	1118	1111	1091	1084	1090	1107	1114
30	1062	1064	1061	1018	1023	1031	1057	1059
35	997.3	998.7	993.8	939.5	954.7	964.4	988.9	992.9
40	923.7	928.6	926.2	865.3	878.8	893.2	921.1	922.8
45	842.5	831.8	842.9	732.3	795.6	808.2	838.0	840.3
50	754.2	707.6	759.6	592.7	706.6	722.3	754.8	756.8
55	660.2	582.2	662.3	490.9	611.2	625.8	657.9	659.3
60	559.1	479.6	565.0	399.0	511.7	529.1	560.9	560.9
65	451.4	387.1	458.2	308.0	406.4	423.6	454.6	456.2
70	340.7	290.1	351.5	224.7	298.3	317.9	348.3	349.7
75	219.5	198.2	247.9	147.0	163.4	211.8	245.2	240.7
80	117.1	112.2	144.3	81.42	59.93	114.0	142.1	136.7
85	21.80	45.57	73.17	32.88	14.48	41.64	71.25	55.01
90	0.3653	2.755	2.029	2.697	0.4430	0.4464	0.3879	1.713
DEG	LUMINOUS INTENSITY:cd							

Zonal Lumen Summary

T	Φzone	Φtotal	%lum, lamp
0-5	29.55	29.55	0.86,0.86
5-10	87.57	117.1	3.41,3.41
10-15	142.7	259.8	7.57,7.57
15-20	192.8	452.6	13.2,13.2
20-25	236.5	689.1	20.1,20.1
25-30	271.9	961.0	28,28
30-35	298.0	1259	36.7,36.7
35-40	313.9	1573	45.9,45.9
40-45	318.5	1891	55.1,55.1
45-50	309.5	2201	64.2,64.2
50-55	289.0	2490	72.6,72.6
55-60	259.6	2750	80.2,80.2
60-65	223.1	2973	86.7,86.71
65-70	180.0	3153	91.9,91.9
70-75	133.8	3286	95.8,95.8
75-80	86.53	3373	98.3,98.3
80-85	43.87	3417	99.6,99.6
85-90	13.39	3430	100,100
UNIT: lm			

Coefficients Of Utilization

ppc	80%			70%			50%			30%			10%			0
pw	50%	30%	10%	50%	30%	10%	50%	30%	10%	50%	30%	10%	50%	30%	10%	0
pfc	20%			20%			20%			20%			20%			0
RCR	RCR:Room Cavity Ratio						(CU)									
0.0	119	119	119	116	116	116	111	111	111	106	106	106	102	102	102	100
1.0	104	100	96	102	98	95	98	95	92	94	91	89	90	88	86	84
2.0	91	84	79	89	83	78	86	80	76	82	78	74	79	76	72	70
3.0	80	72	65	78	71	65	75	69	64	73	67	63	70	66	62	59
4.0	71	62	56	70	61	55	67	60	54	65	59	54	63	57	53	51
5.0	63	54	48	62	54	48	60	53	47	58	52	47	56	51	46	44
6.0	57	48	42	56	48	42	54	47	41	53	46	41	51	45	41	38
7.0	52	43	37	51	43	37	49	42	37	48	41	36	47	41	36	34
8.0	47	39	33	47	38	33	45	38	33	44	37	32	43	37	32	30
9.0	43	35	30	43	35	30	42	34	29	41	34	29	40	34	29	27
10.0	40	32	27	40	32	27	39	32	27	38	31	27	37	31	26	25

FME TN1 SERIES

LINEAR LED FIXTURE

AVERAGE ILLUMINANCE CURVE

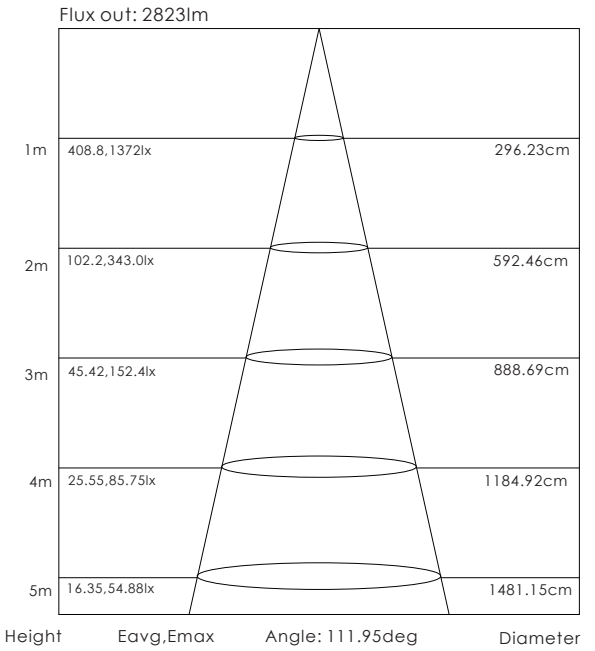

Note: The Curves indicate the illuminated area and the average illumination when the luminaire is at different distance

PHOTOMETR Y

Fixture photometry has been conducted accredited testing laboratory in accordance with IESNA TN1-79-08. IESNA TM-79-08 specifies the entire luminaire as the source resulting in a fixture efficiency of 100%.Result may vary per actual order.

Luminous Intensity Distribution Diagram

TN1-46-DM-XXX

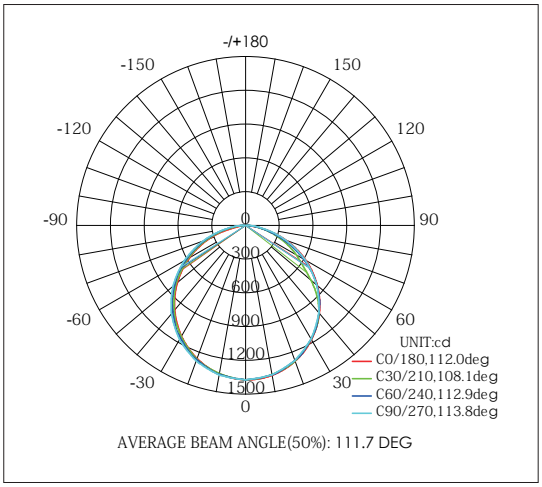

Zonal Flux Diagram

T	C0	C45	C90	C135	C180	C225	C270	C315
5	1369	1362	1360	1357	1362	1359	1361	1363
10	1353	1347	1348	1337	1339	1340	1350	1348
15	1325	1322	1313	1308	1305	1312	1317	1324
20	1285	1278	1278	1257	1260	1265	1283	1281
25	1234	1230	1221	1196	1204	1214	1229	1234
30	1173	1168	1164	1124	1138	1151	1174	1173
35	1101	1096	1088	1046	1063	1079	1100	1101
40	1020	1017	1012	958.9	980.5	1002	1026	1024
45	930.2	914.1	918.5	830.1	889.3	908.9	934.5	933.5
50	832.7	791.6	825.0	685.9	791.3	814.9	843.2	841.6
55	728.4	651.6	716.5	560.4	686.4	709.1	736.9	734.3
60	617.6	529.2	608.0	451.8	576.0	602.6	630.6	625.5
65	500.2	421.9	489.5	348.2	460.1	485.9	513.6	510.2
70	380.1	315.8	371.0	252.4	340.6	369.0	396.6	393.9
75	250.6	211.7	257.9	164.2	193.5	251.6	282.2	276.3
80	124.0	118.0	144.9	90.10	67.07	141.1	167.8	162.2
85	27.51	46.85	73.89	35.87	19.47	55.36	86.11	69.35
90	0.4329	3.120	2.872	3.382	0.4385	0.8703	4.446	4.951
DEG	LUMINOUS INTENSITY:cd							

Zonal Lumen Summary

T	ϕzone	ϕtotal	%lum, lamp
0-5	36.62	36.62	0.86,0.86
5-10	109.0	145.6	3.39,3.39
10-15	178.4	324.0	7.52,7.52
15-20	241.2	565.2	13.1,13.1
20-25	292.2	857.4	20,20
25-30	324.6	1182	27.8,27.8
30-35	336.6	1519	36.5,36.5
35-40	325.0	1844	45.6,45.6
40-45	284.1	2128	54.9,54.9
45-50	227.7	2356	63.9,63.9
50-55	183.3	2539	72.4,72.4
55-60	149.5	2688	79.9,79.9
60-65	115.3	2804	86.5,86.5
65-70	88.48	2892	91.8,91.8
70-75	67.90	2960	95.7,95.7
75-80	50.44	3010	98.3,98.3
80-85	29.93	3040	99.6,99.6
85-90	9.692	3050	100,100
UNIT: lm			

Coefficients Of Utilization

ppc	80%			70%			50%			30%			10%			0
pw	50%	30%	10%	50%	30%	10%	50%	30%	10%	50%	30%	10%	50%	30%	10%	0
pfc	20%			20%			20%			20%			20%			0
RCR	RCR:Room Cavity Ratio						(CU)									
0.0	119	119	119	116	116	116	111	111	111	106	106	106	102	102	102	100
1.0	104	0	96	102	98	95	98	94	92	94	91	89	90	88	86	84
2.0	91	84	78	89	83	78	85	80	76	82	78	74	79	76	72	70
3.0	80	72	65	78	71	65	75	69	64	73	67	62	70	65	61	59
4.0	71	62	55	69	61	55	67	60	54	65	58	53	62	57	53	51
5.0	63	54	48	62	54	47	60	53	47	58	52	46	56	50	46	44
6.0	57	48	42	56	48	41	54	47	41	53	46	41	51	45	40	38
7.0	52	43	37	51	43	37	49	42	36	48	41	36	47	40	36	34
8.0	47	39	33	46	38	33	45	38	33	44	37	32	43	37	32	30
9.0	43	35	30	43	35	29	42	34	29	40	34	29	39	33	29	27
10.0	40	32	27	39	32	27	38	31	27	37	31	26	37	31	26	25