COMET SERIES

EXPLOSION PROOF FLOOD

Project:	
Type:	
Catalog #:	

BUY AMERICAN ACT COMPLIANT

The COMET SERIES Class 1, Division 2 Explosion Proof Hazardous Location Flood luminaire is available with a clear tempered glass lens. Typical lighting applications include industrial facilities, oil, gas, painting facilities, manufacturing, and auto service facilities.

SPECIFICATIONS AND FEATURES

HOUSING: Heavy-Duty Die Cast Aluminum Housing with ¾" Stainless Steel Close-Up Plugs for Wiring Entrance Conduits and Fittings.

LISTING AND RATINGS: ETL Listed for Hazardous Locations Per UL844 as Follows: Class 1, Division 2 Groups A, B, C, D; T4 Temperature Rating, -25°C to +50°C Ambient. Suitable for Wet Locations, IP66 Sealed LED Compartment

FINISH: Powdercoat Finish Over a Chromate Conversion Coating.

LENS: Clear Tempered Glass Lens

MOUNTING OPTIONS: Mount with Stamped Steel Adjustable Yoke. Includes 3´ 16/3 SJOOW Yellow Jacketed Cord and Rated Connector. Rated for 6 #12 AWG 90°C for Through Wiring.

LED: Aluminum Boards

WATTAGE: Array: 132.2w, System: 140.2w

DRIVER: Electronic Driver, 120-277V, 50/60Hz; Less Than 20% THD and PF>0.90. Standard Internal Surge Protection 6kV. 0-10V Dimming Standard for a Dimming Range of 100% to 10%; Dimming Source Current is 150 Microamps.

WARRANTY

5-Year Warranty. See Page 2 for Projected Lumen Maintenance Table.

DIMENSIONS	
Height (A)	10¾˝ (273mm)
Width (B)	13¾˝ (348mm)
Length (C)	9¾˝ (248mm)

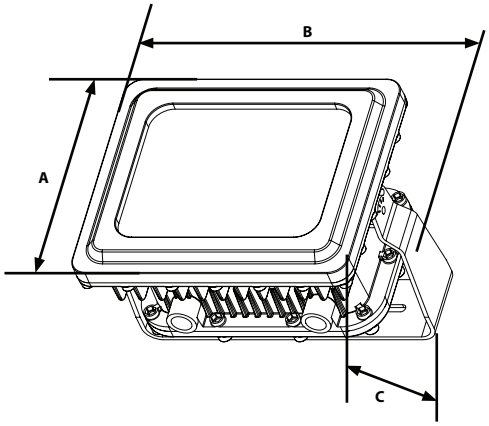

	B	132	LV	5K	TG	GR	E	
Model	**Optics**	**Wattage**	**Driver**	**CCT**	**Lens**	**Color**	**Mount**	**Options**
COM Explosion Proof Flood	**B**=110°H x 110°V, NEMA 7H x 7V	**132**=132w	**LV**=120-277V	**5K**=5000K	**TG**=Clear Tempered Glass Lens	**GR**=Gray	**E**=Adjustable Yoke	**SP**=Surge Protection

PHOTOMETRIC DATA

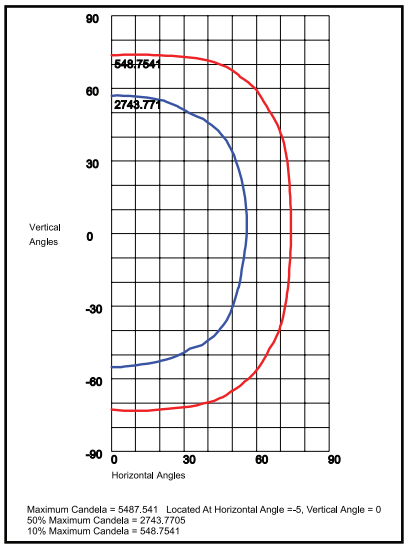

Clear Tempered Glass Lens

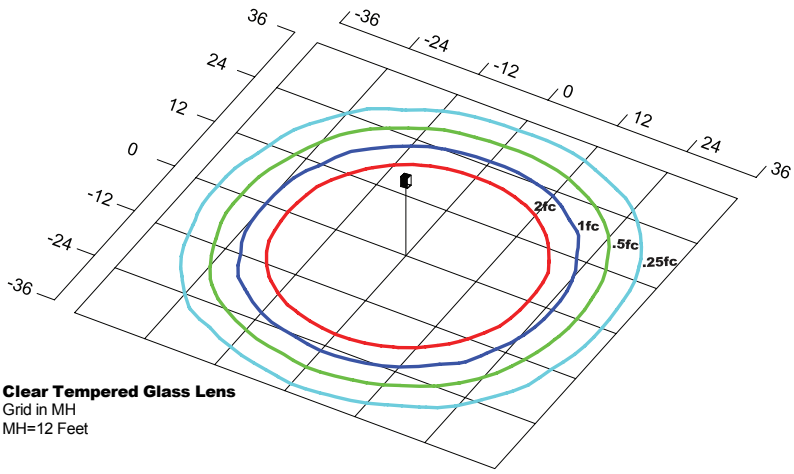

Clear Tempered Glass Lens
Grid in MH
MH=12 Feet

PHOTOMETRIC PERFORMANCE

					5000 CCT 80 CRI	
LED Board Watts	**Drive Current (mA)**	**Input Watts**		**Optics**	**Lumens**	**LPW**
132w	465	140	B	110°H x 110°V, NEMA 7H x 7V	15,046	108

PROJECTED LUMEN MAINTENANCE

Data shown for 5000 CCT			Compare to MH			
TM-21-11	**Input Watts**	**Initial**	**25,000 Hrs**	**50,000 Hrs**	**100,000 Hrs**	**Calculated L70 at 25°C**
L70 Lumen Maintenance at 25°C / 77°F	140	1.00	0.98	0.95	0.91	329,000
TM-21-11	**Input Watts**	**Initial**	**25,000 Hrs**	**50,000 Hrs**	**100,000 Hrs**	**Calculated L80 at 40°C**
L80 Lumen Maintenance at 50°C / 104°F	140	1.00	0.95	0.90	0.80	149,000
TM-21-11	**Input Watts**	**Initial**	**25,000 Hrs**	**50,000 Hrs**	**100,000 Hrs**	**Calculated L80 at 40°C**
L80 Lumen Maintenance at 40°C / 104°F	140	1.00	0.96	0.93	0.86	142,000

NOTES:
1. **Projected per IESNA TM-21-11. Data references the extrapolated performance projections for the 465mA base model in a 25°C ambient, based on 10,000 hours of LED testing per IESNA LM-80-08.**
2. **Compare to MH box indicates suggested Light Loss Factor (LLF) to be used when comparing to Metal Halide (MH) systems.**