LFS SERIES LED UFO HIGHBAY

Project:	
Type:	
Catalog #:	

FACTORY STOCK 150W SENSOR INSTALLED

Product Description

LEDSION UFO Highbay Die-Casting Aluminum Housing, Corrosion Resistant Paint

Replace 250-400W MH/HPS.

Advantage

- UL DLC Listed d.
- Input Voltage 100-277VAC.
- UV Protection.
- Easy Installation
- Energy saving,
- Low Glare
- Instant start, No flickering o
- No Mercury
- Dimming 1-10V.

*The product can not be connected to a dimming device when it's equipped with Motion Sensor.

Applications

Warehouse

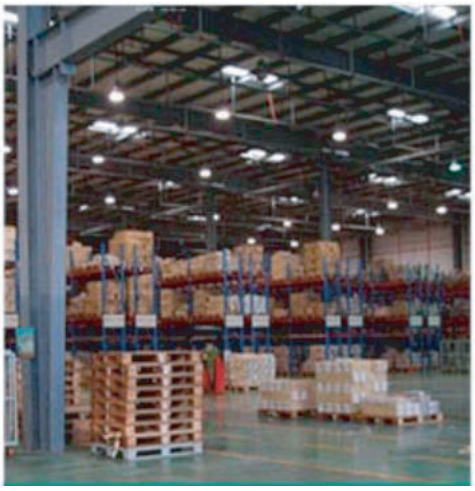

UL LISTED

LIMITED WARRANTY 5 YEAR GARANTIA LIMITADA GARANTIE LIMITÉE

Specifications

FACTORY STOCK SENSOR INSTALLED

Model No.	LFS6-100	LFS6-150	LFS6-200	LFS6-240
Input Power	100W	150W	200W	240W
Lumen	13000-15000LM	19500-22500LM	26000-30000LM	31200-36000LM
Lumen Efficacy	130lm/W			
Color Temperature	4000K, 5000K			
CRI	>80			
Viewing Angle	110°			
Input Voltage	AC 100-277V			
PF	≥0.9			
THD	≤20%			
Driver Brand	Sosen			
LED Brand	Samsung			
LED Type	2835			
LED QTY	320Pcs	440Pcs	600Pcs	720Pcs
Housing	Aluminum Alloy			
Housing Color	Black			
Environment Location	Wet Location			
Operating Temperature	-40 TO 122			
Operating Humidity	20%-90% RH			
Storage Temperature	-40 TO 158			
Storage Humidity	10%-95% RH			
Warranty Time	5 Years			

Photometrics

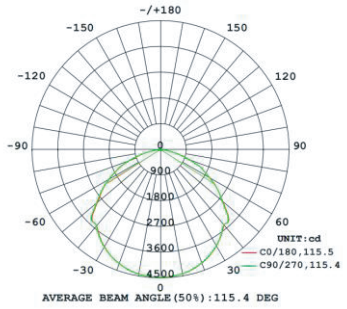

100W

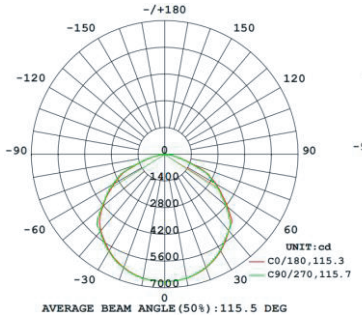

150W

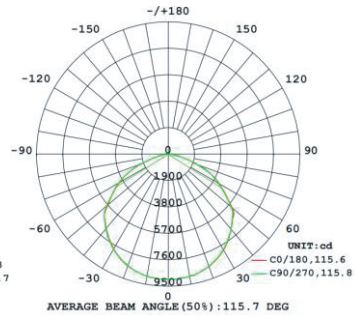

200W

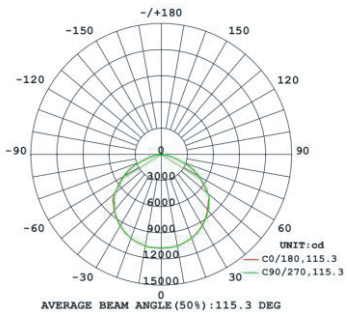

240W

Projected LED Lumen Maintenance

Operating hours	0	25000	50000
Lumen maintenance factor	1	0.91	0.8

Data references the extrapolated performance projections for the UFO Highbay LED platform in a 25°C ambient, based on 10,000 hours of LED testing (tested per IESNA LM-80-08 and projected per IESNA TM-21-11).

Dimensions

1.Rings type:

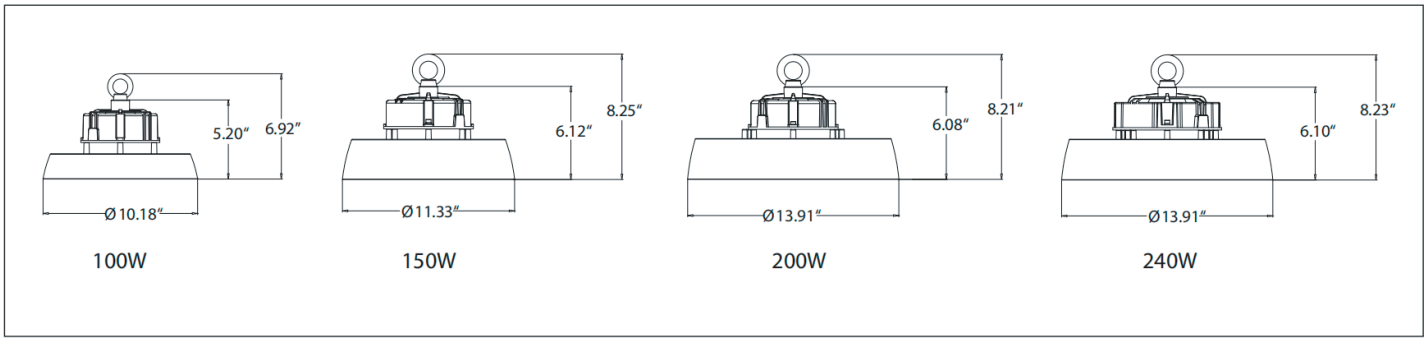

2.Hook type:

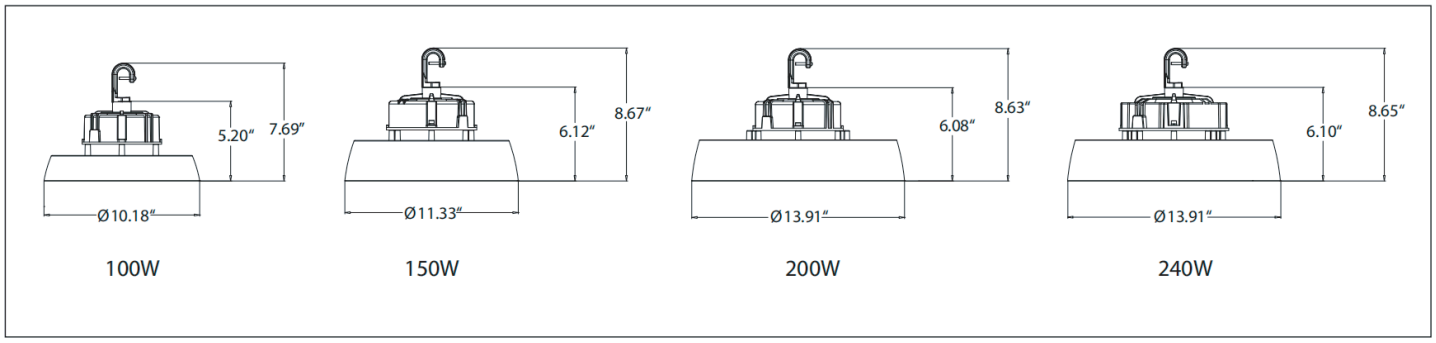

Packing information

Power	Outer box L*W*H	Qty/ctn (pcs)	N. W./Ctn (LBS)	G. W./ctn (lbs)
100W	12.40” x 12.40” x 7.87” 315*315*200mm	1	5.7	7.5
150W	13.58” x 13.58” x 8.66” 345*345*200mm	1	8.0	9.9
200W	16.34” x 16.34” x 8.46” 415*415*215mm	1	9.9	12.3
240W	16.34” x 16.34” x 8.46” 415*415*215mm	1	10.9	13.3

Features

1.

ADC12 aluminum integrated die-casting molding, which has small thermal resistance. The center of the lamp is designed with a unique convection hole to form a chimney convection hear dissipation, which can make the lamps get a better cooling effect in harsh environments.

2.

Both 60° and 90° ring lens can be used.

The microwave sensor is placed is the center of the lamp, It is easy to install and has a simple appearance.

Installation instruction

1. Rings type:

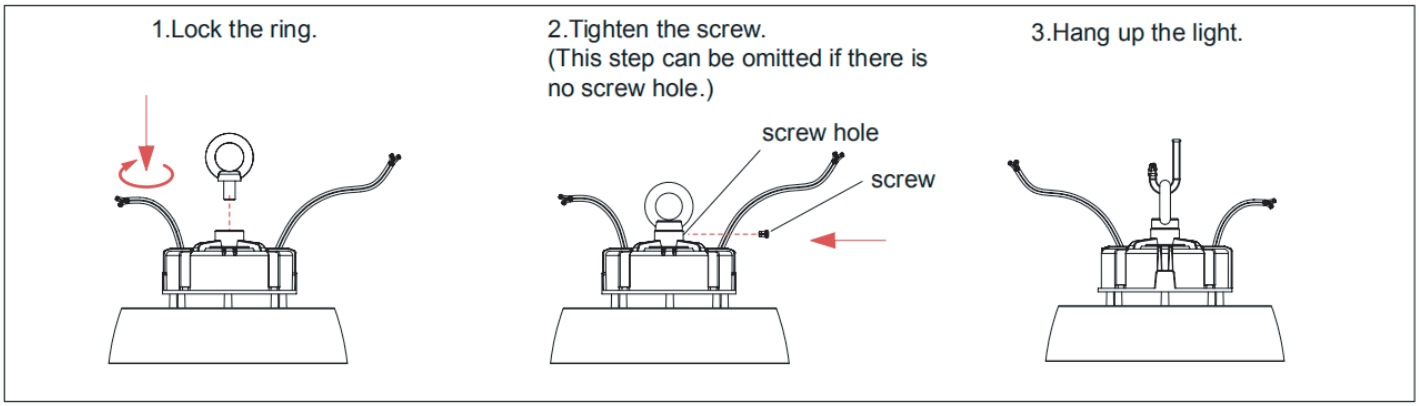

2. Hook type:

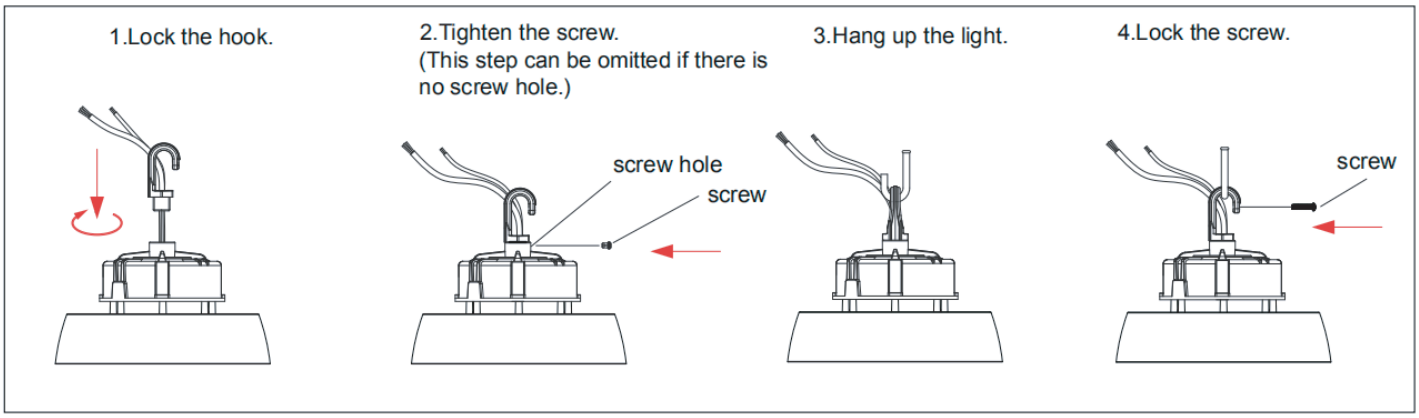

Notice for User

Please turn off power before install or change assembly parts.
The input voltage and lamps should be matched, after connecting the power line,
Please make sure the wiring section is insulated.
No-professionals, must not install and disassemble the lamps.

After-sale Service

The product refers to electrics knowledge. Please don't disassemble it by yourself.
If any quality problem happens, please contact the factory for warranty details.
NOTE: Actual performance may differ as a result of end-user environment and application. All values are without notice.